Bondi Fully Enclosed Rimless Toilet Pan & Cistern
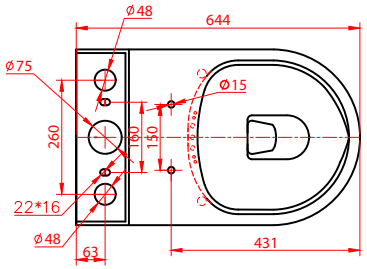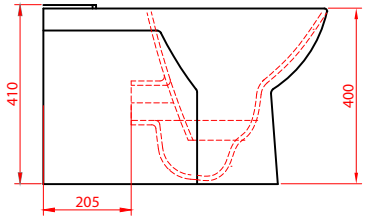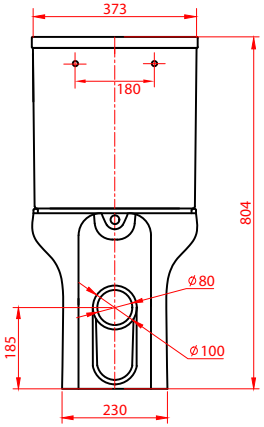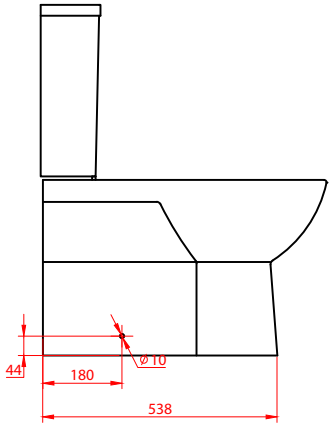
SIZE: H 804 x W 373 x D 644mm
MATERIAL: CERAMIC
FITTINGS: DUAL FLUSH FITTINGS
SEAT: D-SHAPE SOFT CLOSE STANDARD OR SLIM