BELLATERRA HOME

Model: 203054A-ES

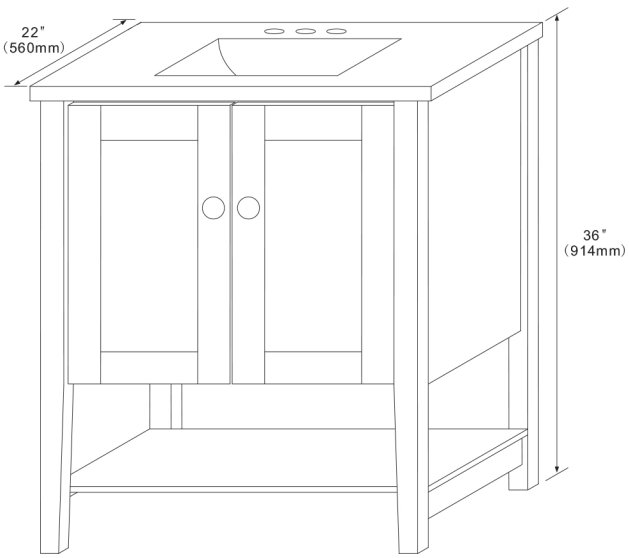

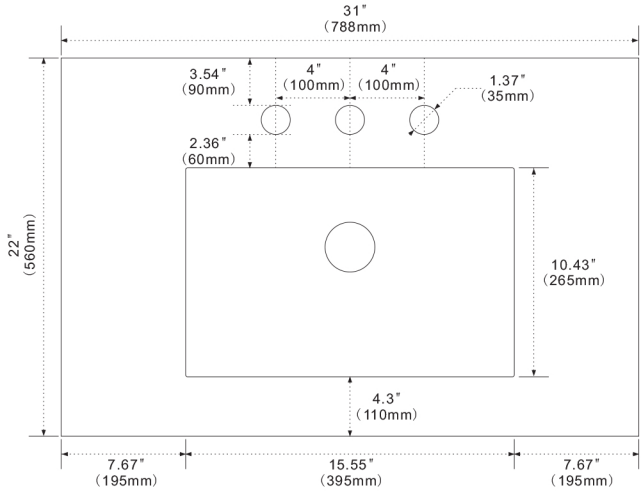

Top view

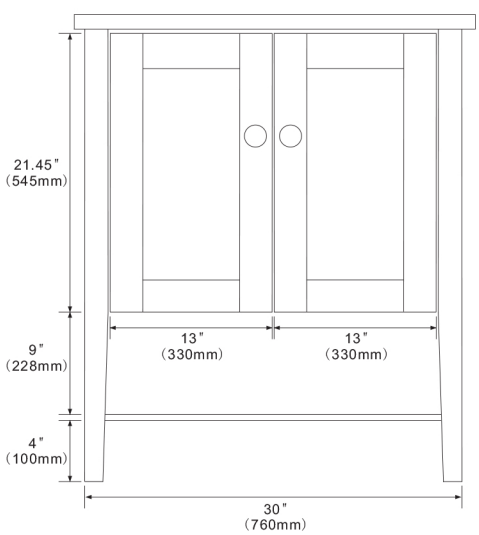

Front view

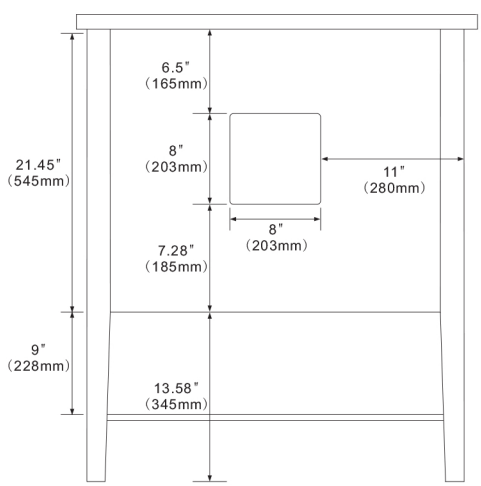

Back view

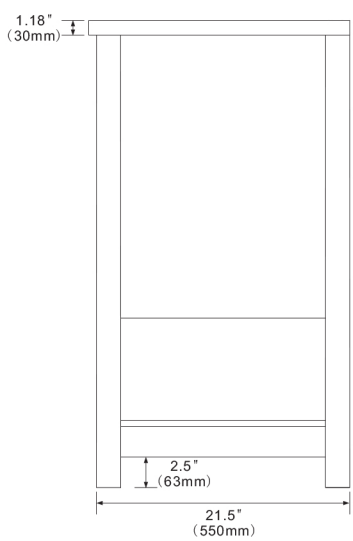

Side view

NOTE: SINK STYLE, SHAPE, FAUCET HOLES, CUTOUT ON TOP, VANITY MAY VARY FROM THE PICTURE ABOVE. INSTRUCTIONAL PURPOSE ONLY.

Professional installation is recommended.

www.bellaterra-home.com

Bellaterra Home LLC, All Rights Reserved 2018