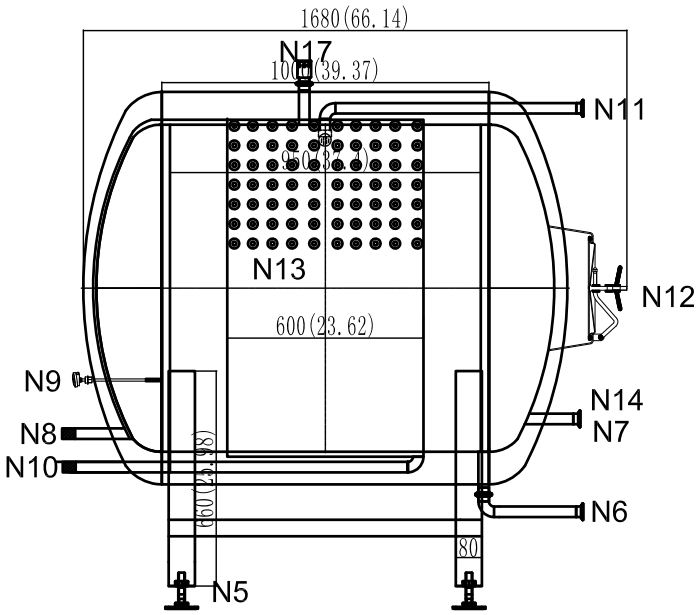

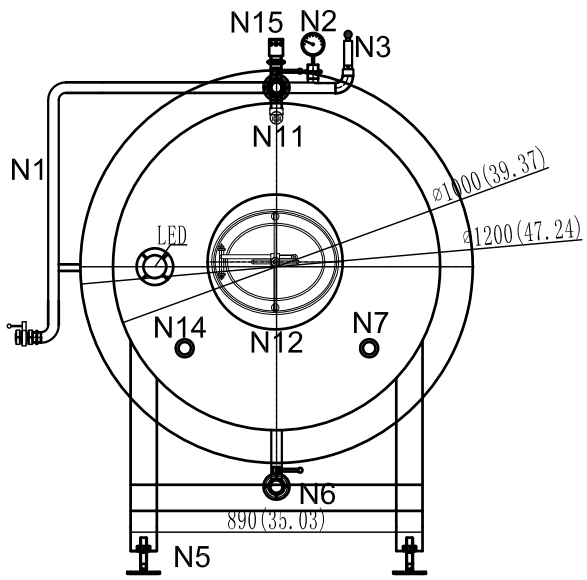

Specification			
Icon	Size	Connecting style	Name
N16			Level gauge
N15	Ø1.5"	Clamp	Safety valve
N14	Ø1.5"	Clamp	Sampling valve
N13		Welding	Gylcol jacket
N12	Ø22.8"*18.9"	Quick-open	Manhole door
N11	Ø1.5"	Clamp	Cleaning ball
N10	1 NPT	Thread	Gylcol outlet
N9	½NPT	Thread	Temperature probe
N8	1 NPT	Thread	Gylcol inlet
N7	Ø1.5"	Clamp	Carbonation port
N6	Ø2"	Clamp	Drainage valve
N5	M20	Thread	Adjusting bolt
N4	3.15"*3.15"	Welding	Supporting leg
N3	Ø1.5"	Clamp	Pressure relief valve
N2	Ø1.5"	Clamp	Pressure gauge
N1	Ø1.5"	Clamp	CIP pipe

Technical Specs

	Interior	Jacket
Material	SUS304	SUS304
Working pressure psi	21.8	29
Design pressure psi	43.5	58
Tank Size	Ø47.24"*66.14"	
Quantity(Nos)	1	
Cooling mode	Gylcol	
Insulation material	Polyurethane	
Insulation thickness	4"	
Outer tank thickness	0.079"	
Inter tank thickness	0.118"	
Cover thickness	0.118"	
Cylinder volume BBL	7	
Total volume BBL	9.5	

Brewhouse Solutions LLC

7BBL horizontal largaring tank