5BBL ELECTRIC BREWHOUSE

Technical Specs

	Vessel	Jacket
Material	SUS304	SUS304
Storage liquid	Wort	Steam
Working pressure psi	Ordinary pressure	29
Heating mode	Steam heating	
Insulation material	Polyurethane	
Insulation thickness	3.15"	
Effective volume BBL	5	
Total volume BBL	7	

Mash/lauter tank

Kettle/whirlpool tank

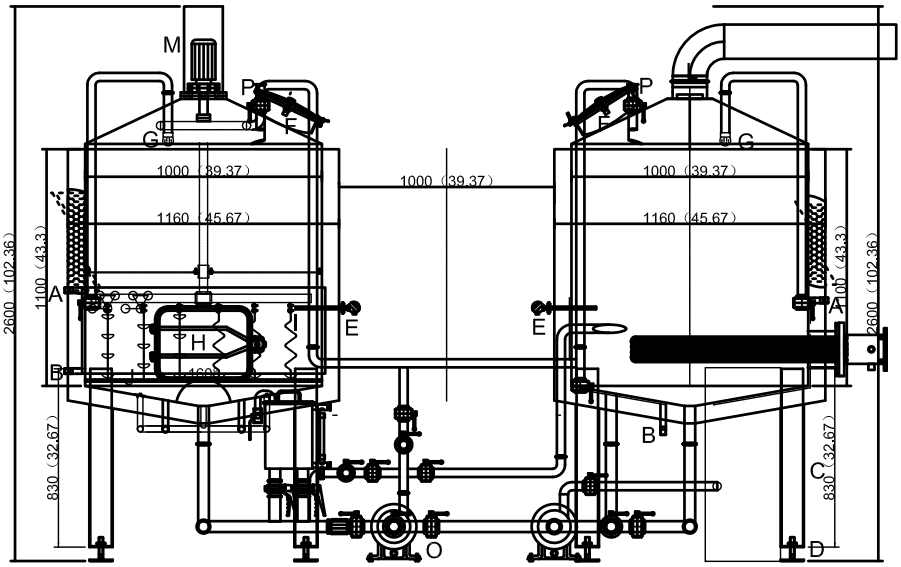

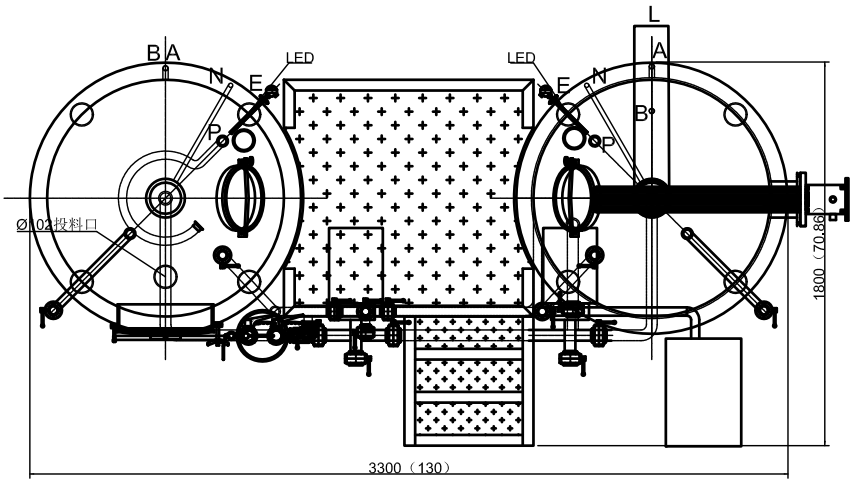

Specification

Icon	Function	Connection mode	Remarks
P	Hot water port	Clamp	Ø1.5"
O	Wort pump		
N	Spool		Ø0.79"
M	Motor		
L	Steam outlet	Clamp	Ø6.26"
K			
J	Sieve plate		
I	Rake knife		
H	Vinasse door	Quick-open	16.8"*13"
G	Cleaning ball	Clamp	Ø1.5"
F	Manhole door	Quick-open	Ø15.75"
E	Temperature probe	Clamp	½NPT
D	Adjusting bolt	Thread	M20
C	Supporting leg	Welding	Ø4"
B	Steam outlet	Thread	Ø1.5"
A	Steam inlet	Thread	Ø1.5"

Technical satandards:

1.Material is SUS 304, inner tank is 3.0mm, out jacket is 2.0mm

2.The inner surface polished to Ra＜0.4um.

3.Weld PaoSha light band, 40 mm width.1. Shell weld shall ensure that the internal level, weld shall be ground flush, can not have uneven edge and scratches.

4.Inside of equipment treat with Acid cleaning passivation.

Brewhouse Solutions LLC

5BBL ELECTRIC BREWHOUSE