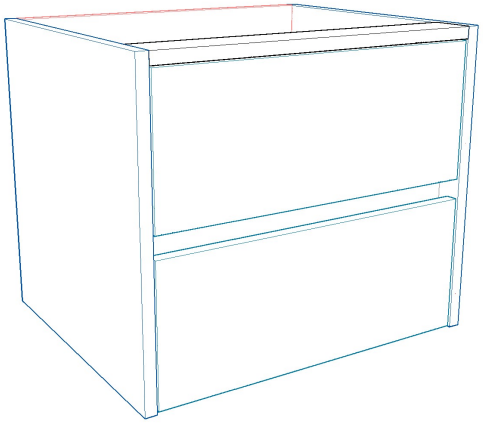

Isometric view
Realistic

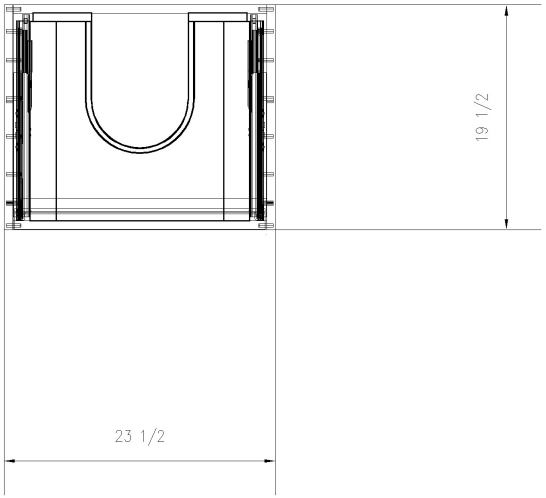

View from top: 1:10@A3
2D Wireframe

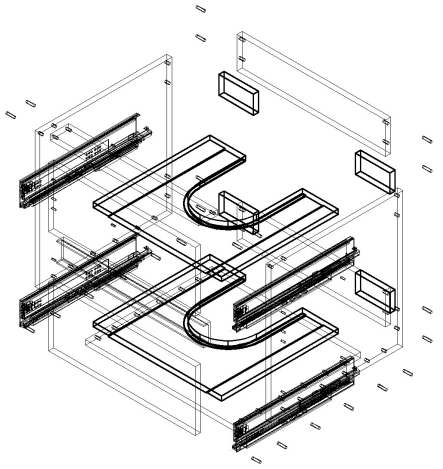

Exploded view
X-Ray

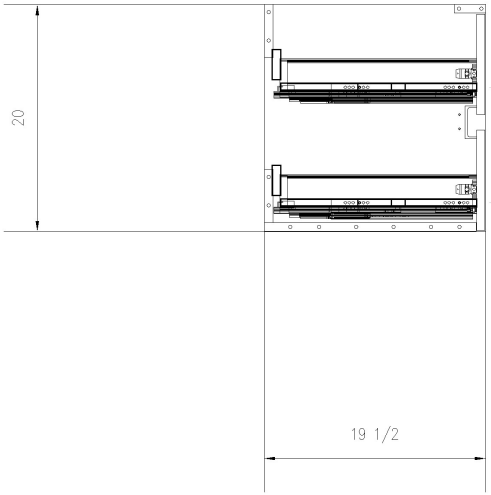

View from right: 1:10@A3
2D Wireframe

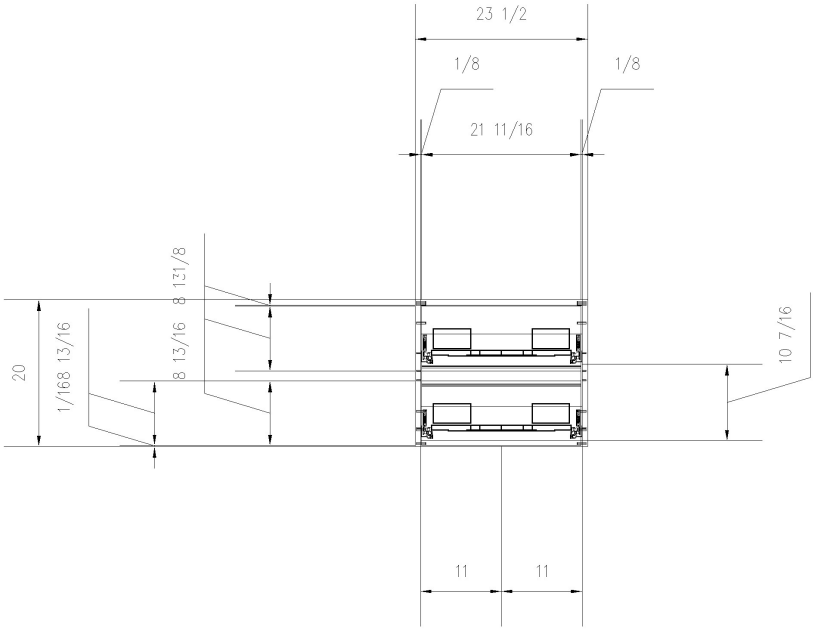

Front view: 1:10@A3
2D Wireframe

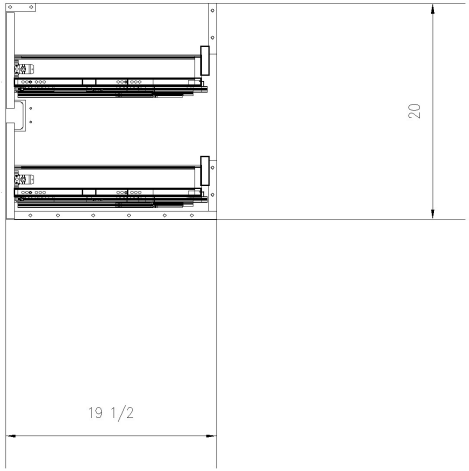

View from right: 1:10@A3
2D Wireframe

M105FO-24S2-CO-GSS-19.5

Articleinfo		Articleinfo		Dimensions / Weight / Position		Ordercolors		Adressinfo	
Articleinfo 1		Articleinfo 6		Article Height	20	Ordercolor 1		Address 1	
Articleinfo 2		Articleinfo 7		Article Width	23.5	Ordercolor 2		Address 2	
Articleinfo 3		Articleinfo 8		Article Depth	19.5	Ordercolor 3		Address 3	
Articleinfo 4		Articleinfo 9		Article Weight	0	Ordercolor 4		Zip	
Articleinfo 5		Articleinfo 10		Hierarchy Number	1	Ordercolor 5		Notice	

	Date	Articlename	Page
Current	9/4/2022	VS_2DR	1
Modified		Articledescription	Name
Created		Article Designer Group	
Loading		Construction	Scale
Delivery		STANDARD	1:219 @ A3

MARFA CABINETS 6362_1