JEE-O original 02TH

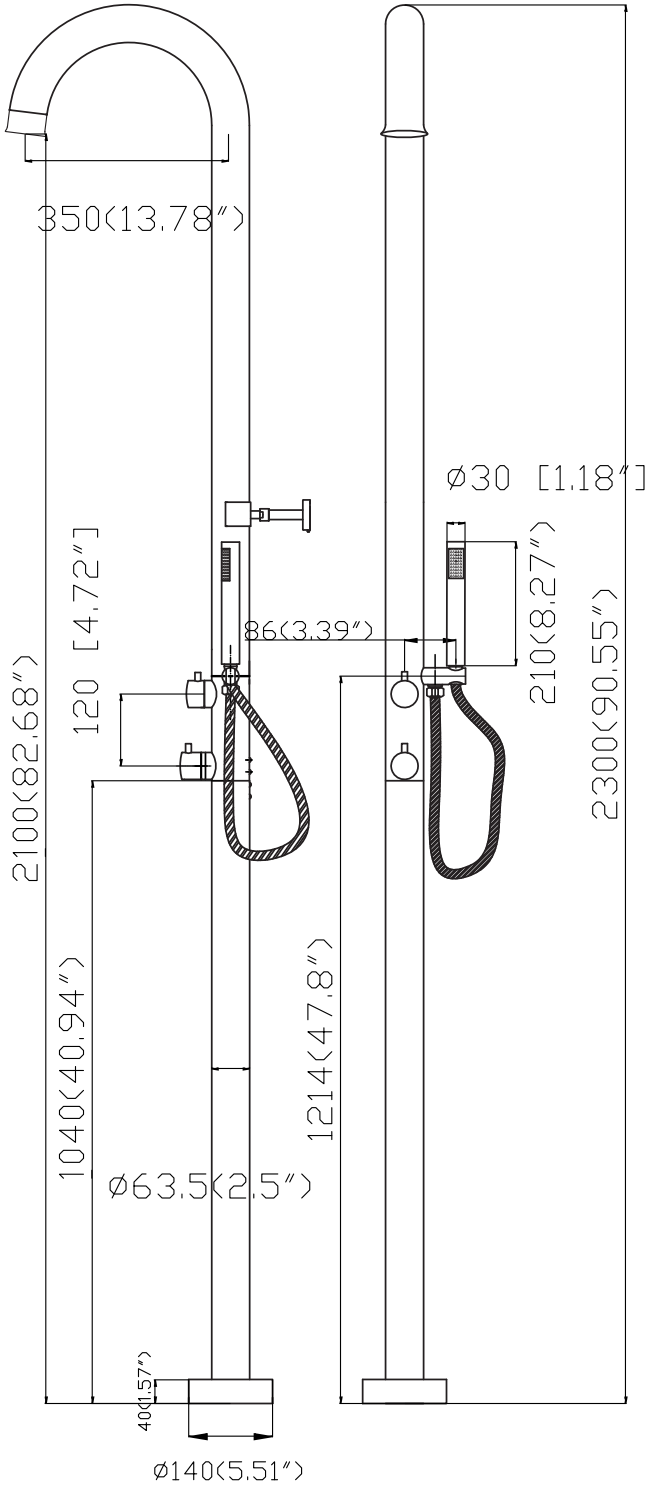

Article code:
400-6200 (original-02TH-brushed)
400-6280 (original-02TH-polished)
Cartridge: Sedal mixer
Material : Stainless Steel r304
Connection: nylon(out)/epdm(in) flexhose with brass swivel
Lenght of flexhose 150 cm
Flow at water of 38˚C /100.4˚F
12l / 3.2gal p/m at 3bar presure
Dimension package:
L 158 x W 18 W 54 x H 21 cm
L 62,2 x W 7,1 W 21,3 x H 6,3"
Weight: 13.2 kg / 29.10 lbs
Package weight: 2,0kg /4.40lbs
Placing on a water-tight floor
2 year warranty
HS code: 84818011900

Note: UV radiation and extreme temperature can affect the color and structure of the JEE-O original surface.

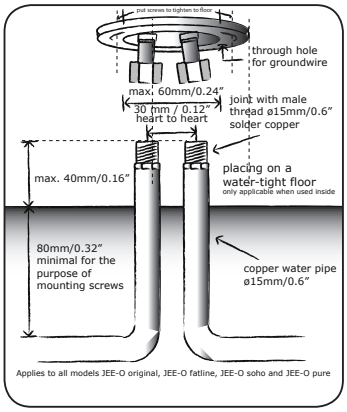

www.jee-o.com

BELGAQUA

JEE-O d.d. March 2016 Models are subject to change and specs may contain typographical errors.