WILLOW CURVED FULL COMBO

SPECIFICATIONS

AVAILABLE IN

CHROME	CHROME - WHITE FACEPLATE	MATT BLACK
D12011-H20013CFC	D12011W-H20013WC	D12011B-H20013BC

FEATURES

Top water inlet. Bottom fixing bracket adjustable
1.5 Meter Metal hose
Overhead rain shower 260mm Ø
3 Function handset – Rain, Massage, Mix (rain/massage)

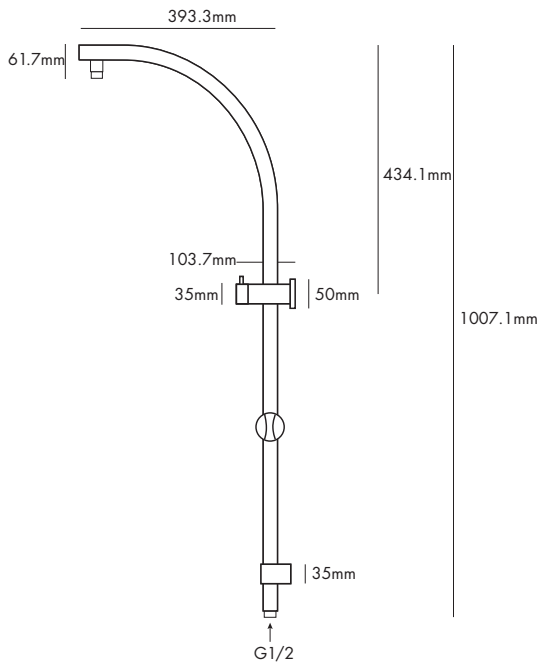

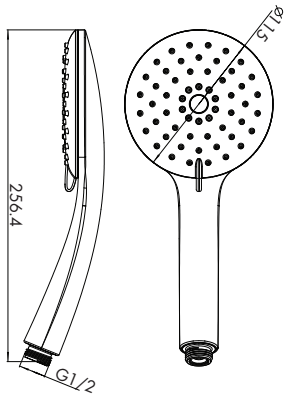

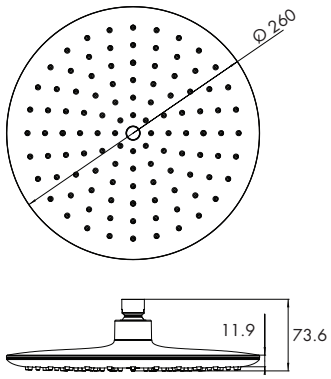

15 YEAR GUARANTEE
(5 YEARS ON MB & BN FINISHES)

WaterMark
WM-022655

WATER RATING
www.waterrating.gov.au
9 litres per minute
Licence No. 1820
COLLIS REAL SHOWERS

Wels Registration No. S14169V

Collis REALSHOWERS
5/10 Mirra Court, Bundoora Vic. 3083 E: Sales@collisrealshowers.com.au T: 03 94573130
www.collisrealshowers.com.au