VENEZIA COMFORT

RIMLESS WALL FACED TOILET PAN COMFORT HEIGHT

JohnsonSuisse
Bathroom Solutions

CODE:
JTTV611

FEATURES

- MODERN STYLE WALL FACED VITREOUS CHINA TOILET PAN
- EFFICIENT RIMLESS DESIGN FOR HYGIENIC FLUSHING
- COMPACT, SHORT PROJECTION PAN SUITABLE FOR SMALL BATHROOMS
- SOFT-CLOSE, QUICK-RELEASE TOILET SEAT
- S OR P TRAP CONFIGURATION INSTALLATION
- VARIABLE S TRAP PAN CONNECTOR (115-145 SET OUT)

COMPONENTS

VENEZIA COMFORT RIMLESS FLUSH TO WALL PAN	JTTV611
VENEZIA QUICK-RELEASE SOFT-CLOSE SEAT	JSEV315

WARRANTY

10 YEARS - REFER TO T&CS AT johnsonsuisse.com.au

WATER RATING
www.waterrating.gov.au
3.5 litres average flush
4.5 L per full flush / 3 L per half flush
In accordance with AS/NZS 6400
Licence No. 0137
Bathroom Products Australia P/L

WaterMark
LIC.WMK26609
AS1172
SAI GLOBAL

PRODUCT DIMENSIONS

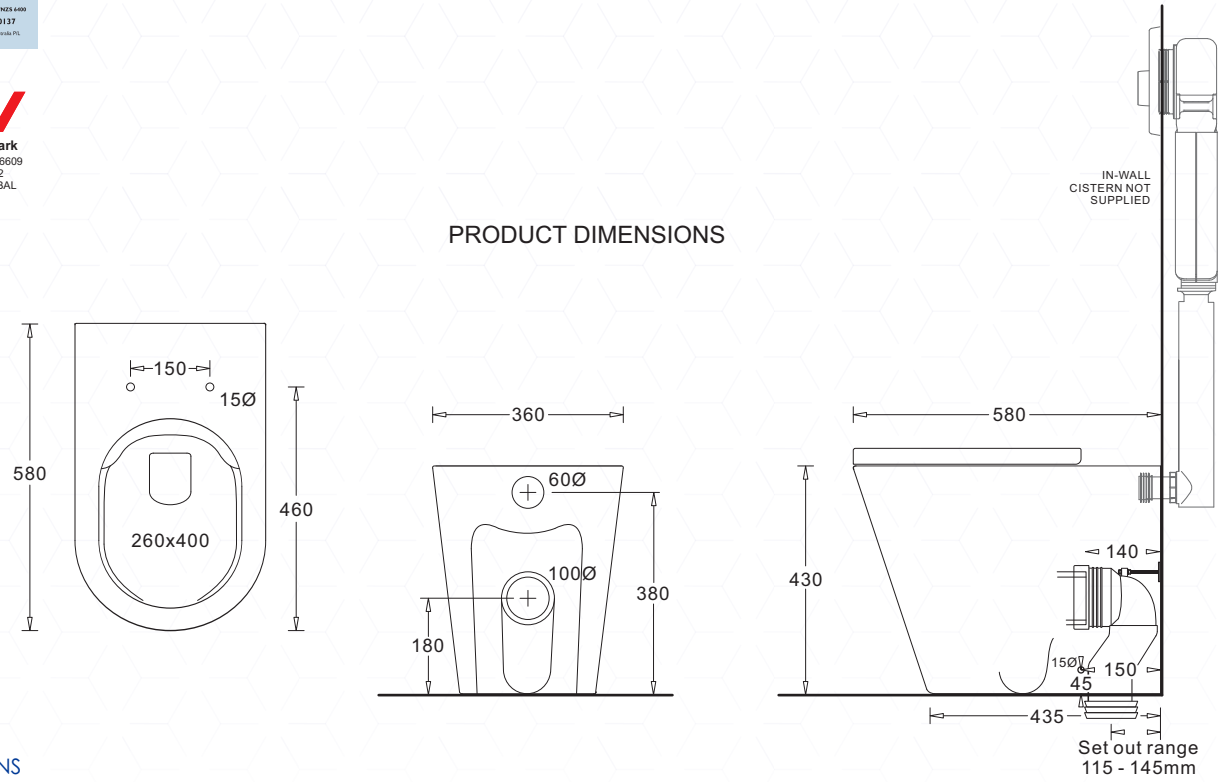

OPTIONS

VENEZIA SEAT HINGE BOLT KIT	XJTTV02

All dimensions are in millimetres and are subject to normal manufacturing variation.
As product development is ongoing BPA reserves the right to vary specifications without notice.

Bathroom Products Australia P/L ABN 87 079 297 617

JohnsonSuisse
Bathroom Solutions
2/97 Banksia St., Botany, NSW 2019
TEL: 1300 717 717 FAX: 1300 746 480
www.johnsonsuisse.com.au

V2 0820