Lustro II

Pull Down Sink Mixer

LF1950254CP | Chrome
LF1950254BN I Brushed Nickel
LF1950254MB I Matte Black
LF1950254BB I Brushed Brass
LF1950254GM I Gun Metal
LF1950254BC I Brushed Copper

WELS 5 STAR 6.0 L/M
Dual Function Spray
Swivel Spout

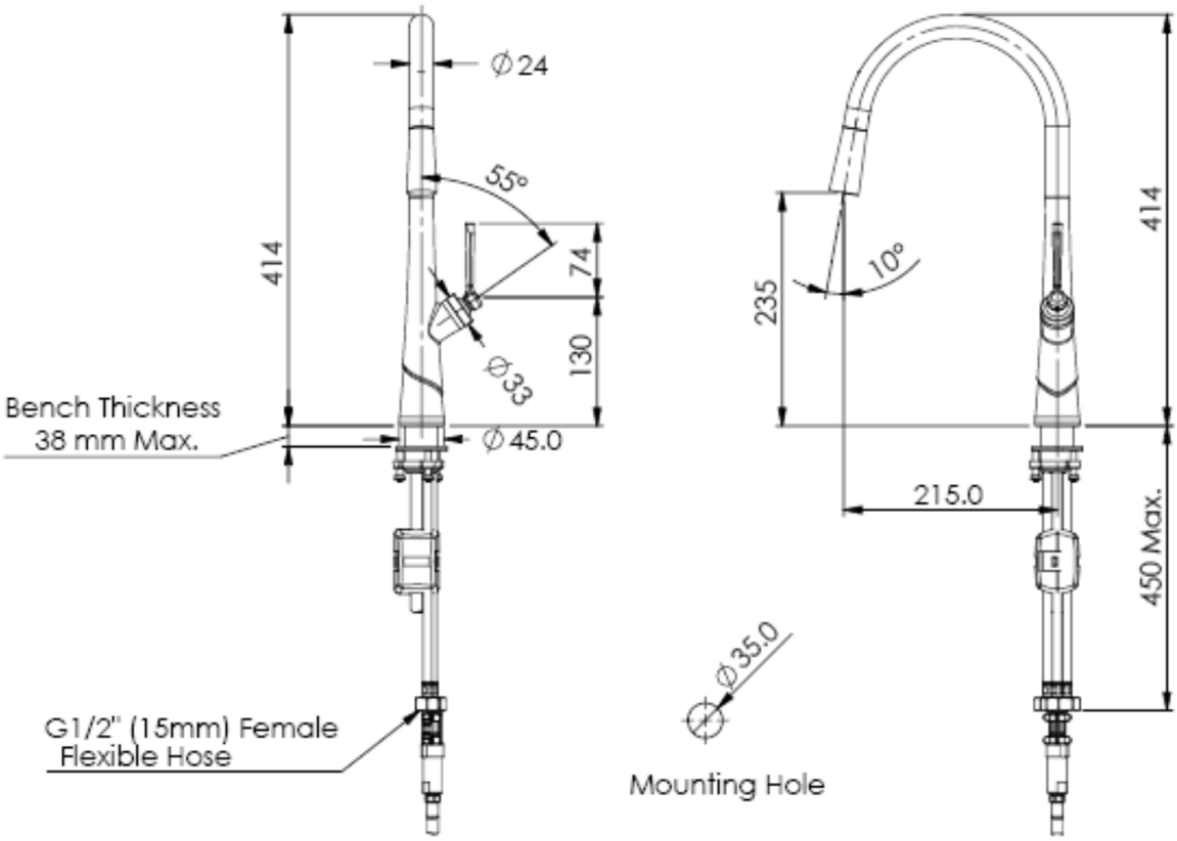

AU PHONE - 1800 244 487
EMAIL - aussales@greenstapware.com
WEBSITE - greenstapware.com.au

GREENS
where life meets water