Delco
ELEVATOR PRODUCTS

OLEO BUFFERS
LSB, MLB & LB

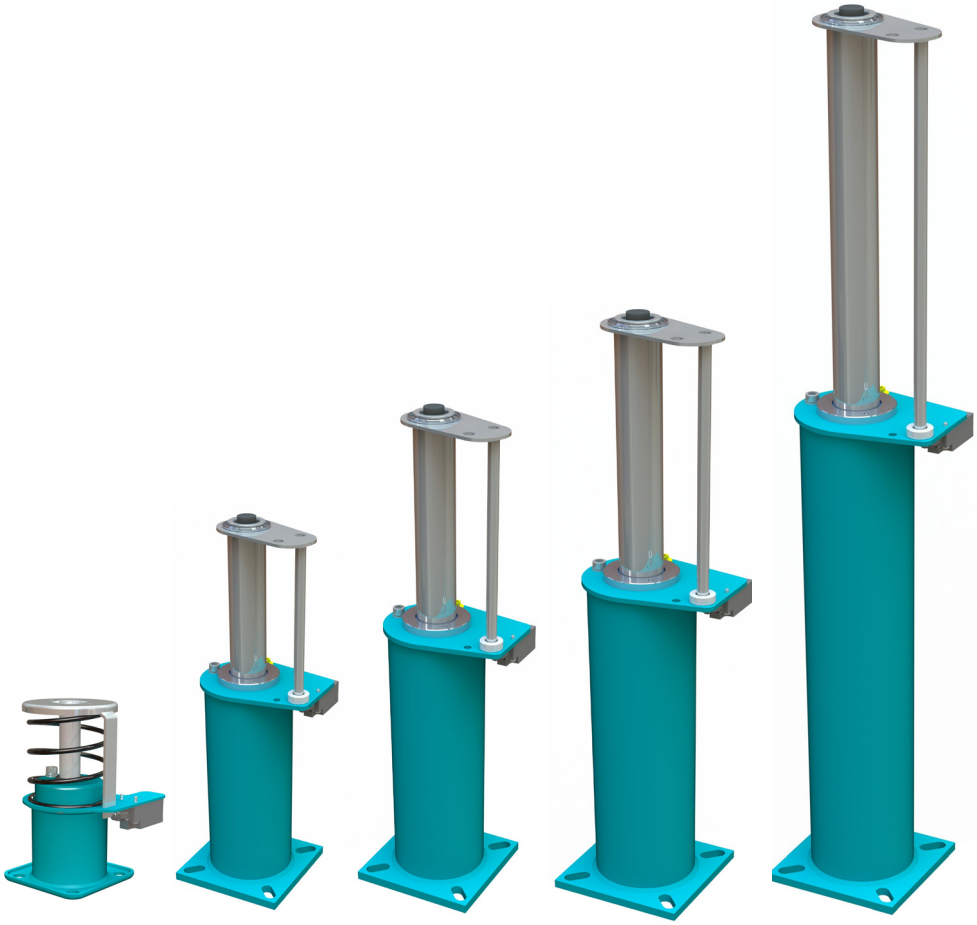

www.delcoelevator.com
info@delcoelevator.com | 1-866-900-3727

LSB & MLB SERIES

Low and Medium Speed (200-700 fpm)

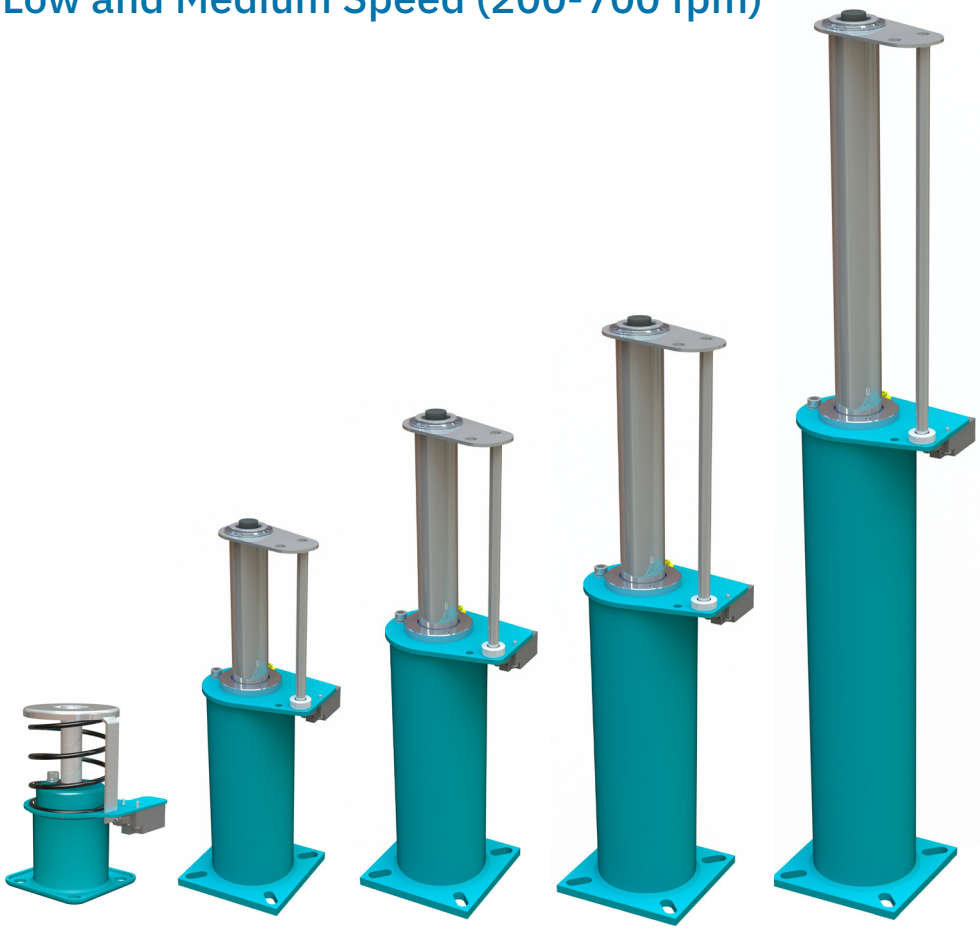

The Oleo Oil Buffers series are self contained, maintenance free units designed for low and medium speed applications.

The series provides a cost effective solution with excellent performance characteristics across an exceptionally wide mass range.

Oleo buffers are designed and built according to strict engineering standards, universally approved and globally certified.

- LSB 10
- MLB 13
- MLB 16
- MLB 18
- MLB 20
- MLB 25
- MLB 35

Specifications

Product	LSB 10	MLB 13	MLB 16	MLB 18	MLB 20	MLB 25	MLB 35
Rated Speed	**200**	**250**	**300**	**350**	**400**	**500**	**700**
Stroke	2.89″	4.72"	6.81″	8.62″	10.98″	17.13″	34.69″
Overall Height	8.8″	16.1"	20.9″	24.9″	30.7″	45.8″	83″
Compressed Height	5.7″	10.8"	13.5″	15.7″	19.2″	28.1″	47.6″
Min Load (lbs)	838	992	992	992	992	992	1323
Max Load (lbs)	7165	12125	12125	12125	12125	12125	12125
Ship Wt (lbs)	9	19.2	28	31	37	54	135
Delco SKU	C-11-2200	C-11-2250	C-11-2300	C-11-2350	C-11-2400	C-11-2500	C-11-2700

LSB 10 HANDLING

When handling LSB buffers ensure your regional health and safety laws are adhered to.

WARNING

DO NOT lift buffer with the striker rod shown in Figure 1. Avoid contact as this may cause damage.

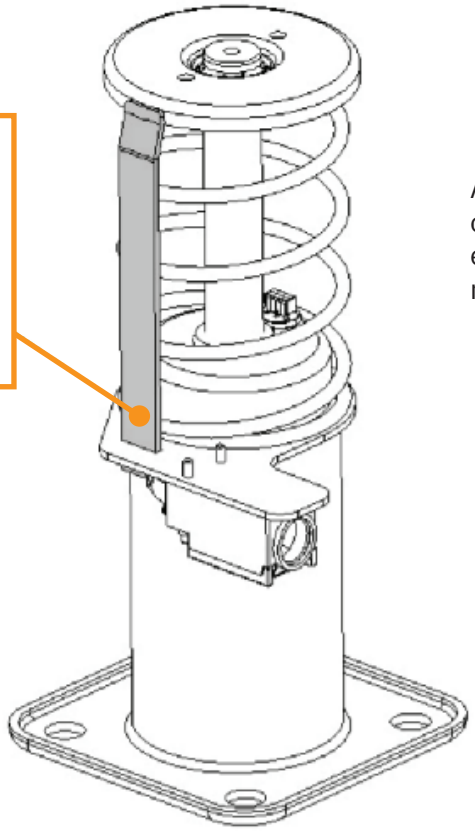

Figure 1

Always confirm the weight of the buffer to be lifted and ensure that a suitable lifting method is used.

Installation Procedure

- Ensure the buffer has been secured into this installation position.
- Oleo recommends a bold size M10 fixings for LSB10, and all four fixing positions are used.
- Ensure this area at the base of the buffer, shown in figure 2 is supported.
- Buffers are to be fitted vertically parallel to guide rail ±5mm.

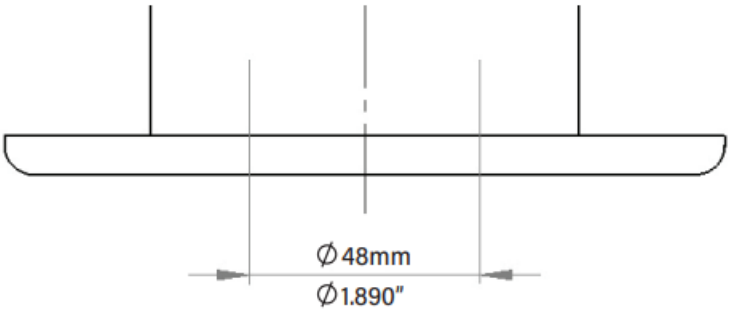

Figure 2

Oil Specification

The oil must confirm to the specification on the buffer data plate - ISOVG68 : SG.88/90 at 15 °C : hydraulic.

Pour Point : 18 °C or lower. Viscosity index 75 or higher.

CAUTION

Take care when handling the oils. Observe the oil manufactures recommendations.

Approximate Oil Volume	0.45 litres

Minimum & Maximum

The oil level needs to be between the Minimum and Maximum marks indicated on the dipstick as shown in figure 3

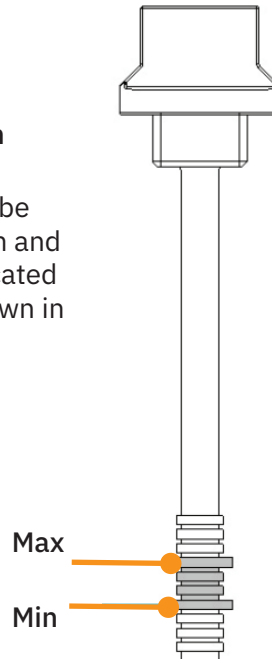

Figure 3

Oil Filling Procedure

NOTICE

The buffer must be vertical and fully extended before filling with oil.

CAUTION

Take care when handling the oils.
Observe the oil manufactures recommendations.

1. Unscrew the dipstick (indicated on figure 4) and remove from the buffer.
2. Wipe dipstick clean and keep safe.
3. Gradually fill the buffer with oil until the oil level is visible between the minimum and maximum levels on the dipstick (indicated on figure 3)
4. Allow the buffer to stand for a minimum of 30 minutes.
5. Re-insert the dipstick DO NOT screw down.
6. Remove dipstick and inspect level. The oil level needs to be between the minimum and maximum marks indicated on the dipstick as shown in figure 3.
7. Once oil level is correct, replace dipstick and securely fasten.

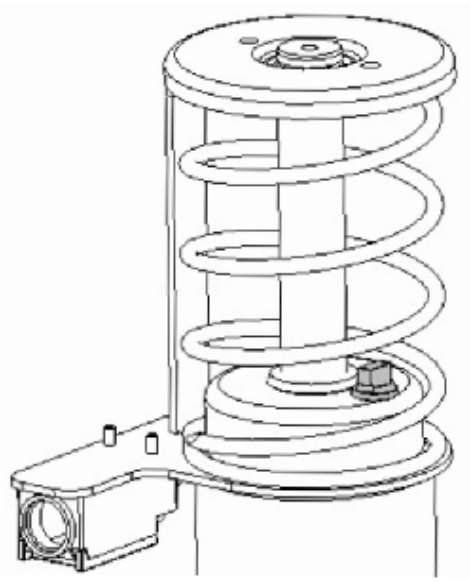

Figure 4

The oil must be within the correct operating range for the buffer to perform correctly.

If further oil is required after checking repeat steps 1-7.

The buffer now needs to stand for at least 30 minutes; this allows the oil to settle.

Oil Checking Procedure

The oil level must be correct and needs to be checked using the following procedure:

1. Unscrew the dipstick (indicated on figure 4) and remove from the buffer.
2. Wipe dipstick clean.
3. Re-insert the dipstick DO NOT screw down.
4. Remove dipstick and inspect level. The oil level needs to be between the minimum and maximum marks indicated on the dipstick as shown in figure 3.
5. Once oil level is correct replace dipstick and securely fasten.

Final Commissioning

Oleo recommends the final 7 step process is followed prior to commissioning:

1. Ensure oil level is correct.
2. Ensure striker is vertically aligned to ±0.5mm.
3. Complete electrical connections to the limit switch.

WARNING

As a safety critical component , buffers should not be installed without a switch.

WARNING

DO NOT overfil past the maximum dipstick mark. If this occures, then oil must be removed from the buffer.

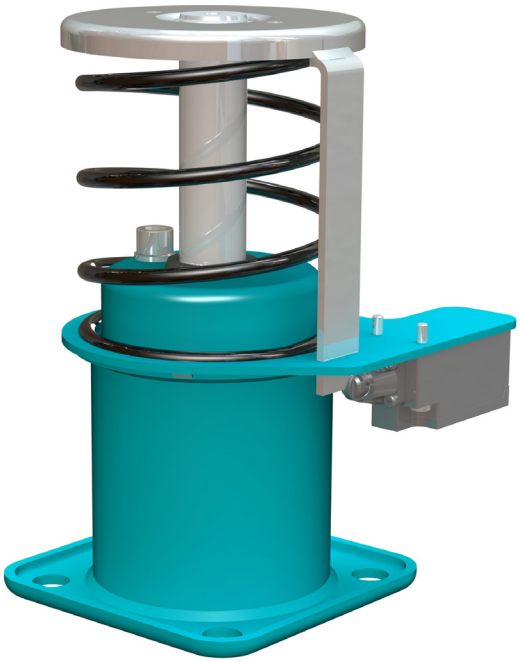

4. Compress the buffer at slow speed across the full working stroke then allow to recoil.
5. Allow the oil to settle for 30 minutes then recheck oil level - see oil checking procedure.
6. Finally, impact the buffer at the full rated speed of the elevator.
7. Complete final checks of oil level and the buffer is at correct working height.

NOTICE

CHECK: The maximum overall height for LSB10 (+0/-2.8mm) - 8.748 in

If the buffer has not returned to the fully extended position (determined by measuring overall height) contact Oleo International.

Maintenance

Oleo recommends the following be carried out every 12 months from installation:

1. Clean away debris and dirt from around the plunger and switch.
2. Check the oil level is correct.
3. Compress the buffer across its full working stroke.
4. After the compression, ensure the buffer has returned to its correct working height and visually check for any damage.

Ensure regional jurisdictions and laws for maintenance are adhered to.

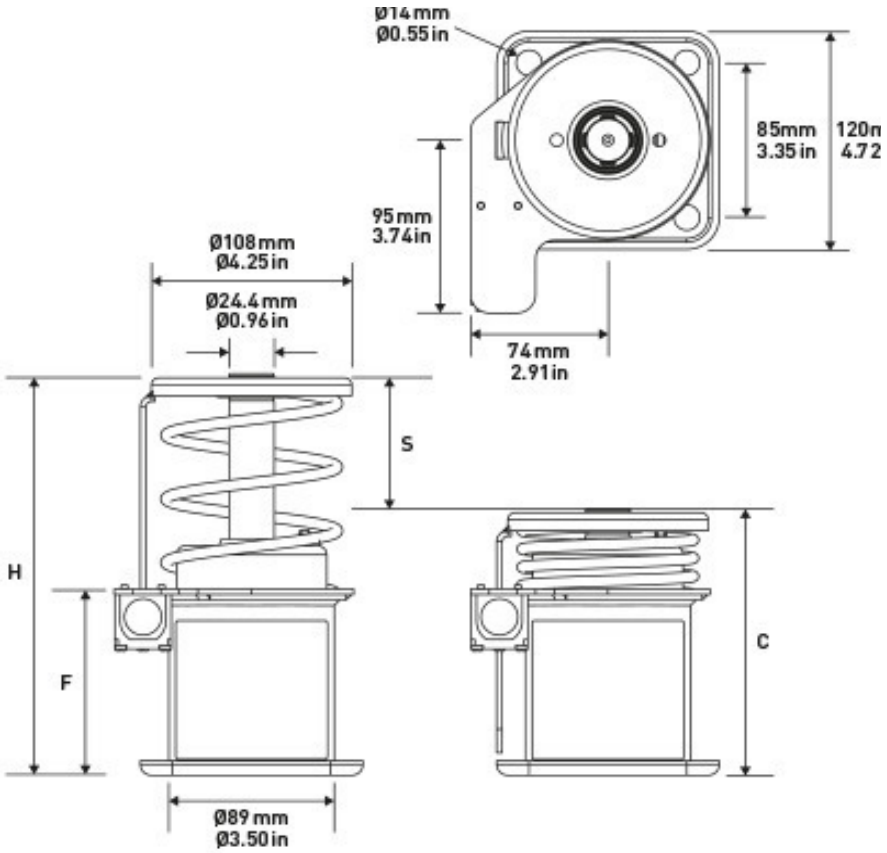

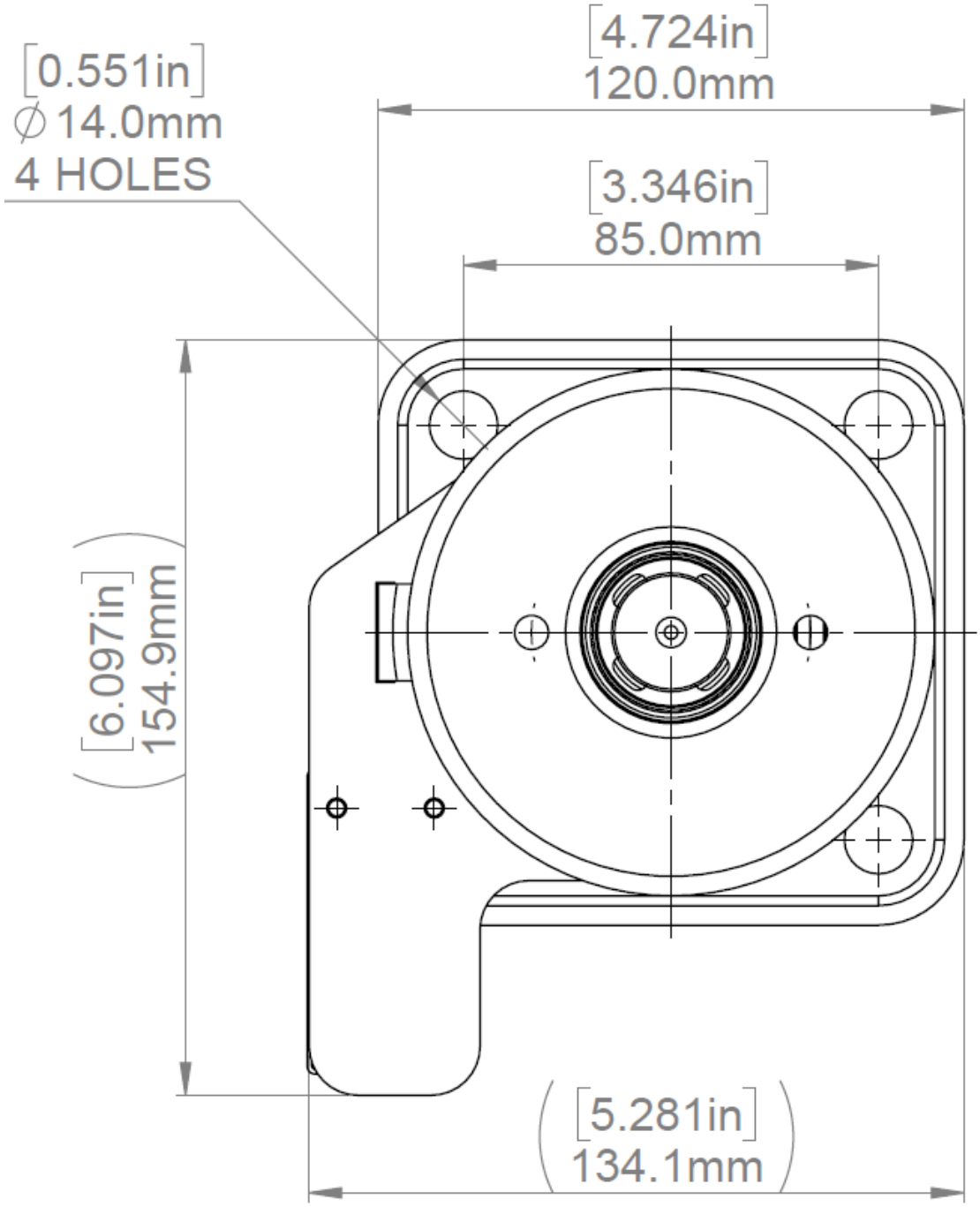

LSB 10 BASE DIMENSIONS

MLB SERIES

- The MLB series has been designed to complement the successful LB series while retaining key operational characteristics.
- The MLB gas hydraulic buffer series is a self contained, maintenance free* unit designed for quick and easy installation, primarily designed for medium speed elevator applications, typical applications include low to medium rise buildings.
- Oleo's MLB buffers weigh approx half of a conventional buffer and have a small space envelope, this means that shipping costs are significantly reduced.
- The MLB series provides a cost effective solution with excellent performance characteristics across an exceptionally wide mass range.

* other than statutory inspections.

HANDLING

- When handling MLB buffers ensure your regional health and safety laws are adhered to.
- Always confirm the weight of the buffer to be lifted and ensure that a suitable lifting method is used.

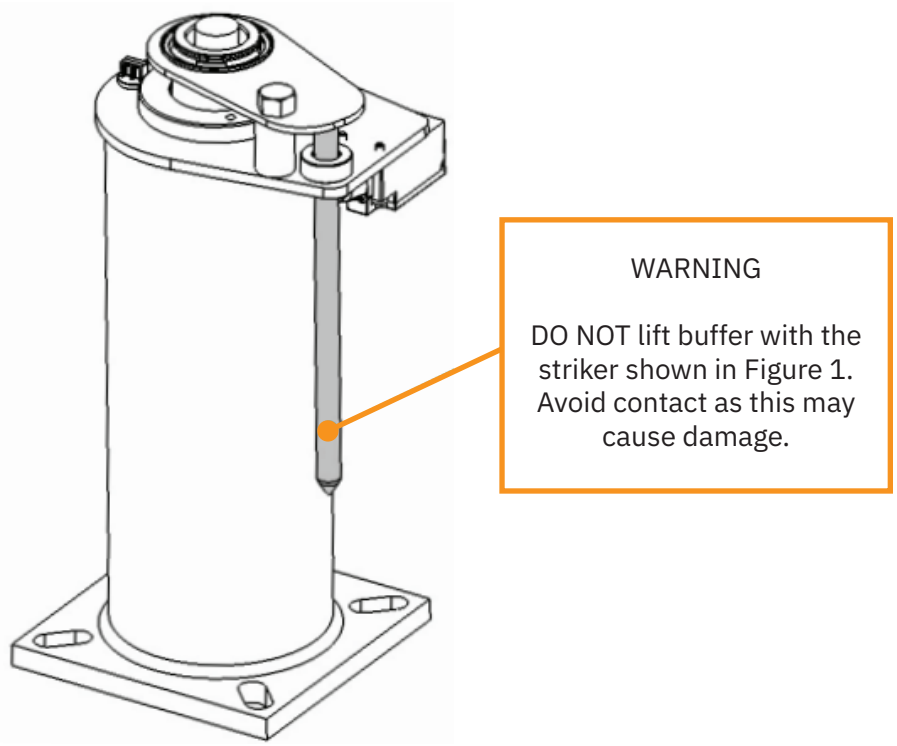

Figure 1

Installation Procedure

- Ensure the buffer has been secured into this installation position.
- Oleo recommends a bold size M12 for fixing and all four fixing positions are used.
- Ensure this area at the base of the buffer, shown in figure 2 is supported.
- At this point the buffer is still compressed in its transportation state, now the buffer can be released by removing the transportation bolt. The following is the recommended removal procedure.
- For a controlled release, lower the elevator car (or equivalent) onto the buffer. This mass must be at least equivavelt to the minimum mass of the specified buffer.
- Minimum mass of the buffer show on the table below:

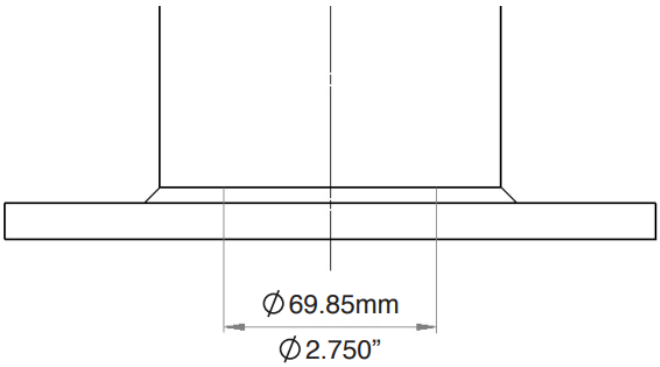

Figure 2

Buffer Model	MLB 13	MLB 16	MLB 18	MLB 20	MLB 25	MLB 35
Min. Mass						
Kg	450	450	450	450	450	600
Lbs	992	992	992	992	992	1323

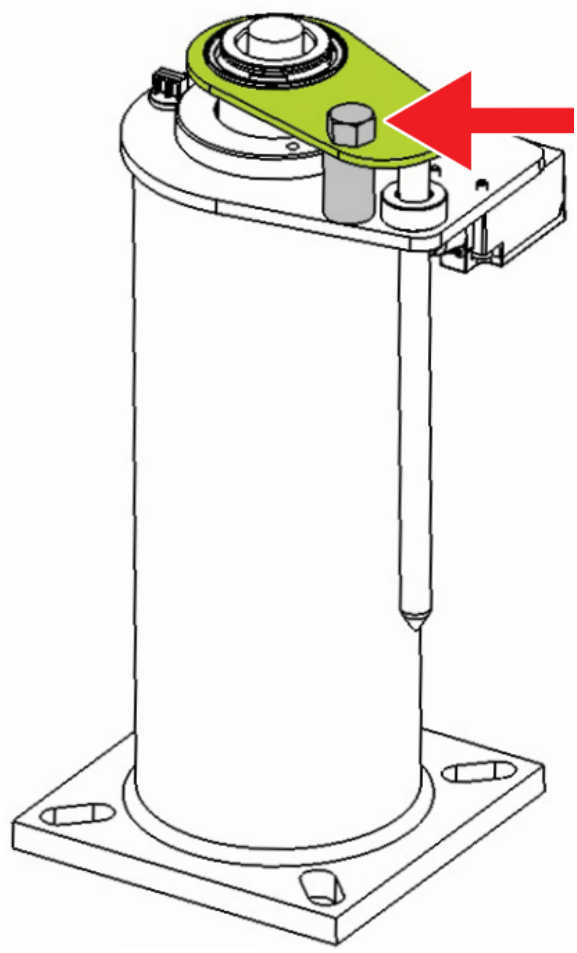

Figure 3

DANGER

Now to release the plunger.
DO NOT stand over the plunger when releasing

- To release the plunger, undo the transportation bolt. (GREY in figure 3)
- Discard the transportation bolt and spacer (GREY in figure 3)
- If used, remove the elevator car (or equivalent) and this will control the recoil and buffer.
- After periods of being held in the compressed state during transportation and storage, the plunger may require assistance to initially extend. This should be done using rubber dead blow mallet to tap the underside of the buffer top plate (GREEN in figure 3) at 90 degree intervals until the plunger extends.
- Once fully extended and stroked the buffer will perform as designed.
- Buffers are to be fitted vertically parallel to guide rail ± 5mm.

Oil Specification

The oil must confirm to the specification on the buffer data plate - ISOVG68 : SG.88/90 at 15 °C : hydraulic.

Pour Point : 18 °C or lower. Viscosity index 75 or higher.

CAUTION

Take care when handling the oils. Observe the oil manufactures recommendations.

Minimum & Maximum

The oil level needs to be between the Minimum and Maximum marks indicated on the dipstick as shown in figure 4

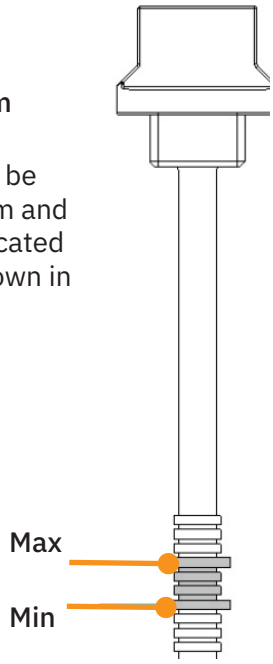

Figure 4

Buffer Model	MLB 13	MLB 16	MLB 18	MLB 20	MLB 25	MLB 32	MLB 35
Approximate Oil Volume							
Litres	1.02	1.41	1.74	2.18	3.32	5.19	19.5
US Gallons	0.27	0.37	0.46	0.58	0.88	1.37	5.15

Oil Filling Procedure

NOTICE

The buffer must be vertical and fully extended before filling with oil.

CAUTION

Take care when handling the oils.
Observe the oil manufactures recommendations.

1. Unscrew the airscrew, remove from the buffer and keep safe. (GREEN in figure 5)
2. Unscrew the dipstick, remove from the buffer and keep safe. (GREY in figure 5).
3. Gradually fill the buffer with oil until the oil level is visible between the minimum and maximum levels on the dipstick (indicated on figure 4)
4. Allow the buffer to stand for a minimum of 30 minutes.
5. Re-insert the dipstick DO NOT screw down.
6. Remove dipstick and inspect level. The oil level needs to be between the minimum and maximum marks indicated on the dipstick as shown in figure 4.
7. Once oil level is correct replace airscrew and securely fasten.
8. Once oil level is correct replace dipstick and securely faster.

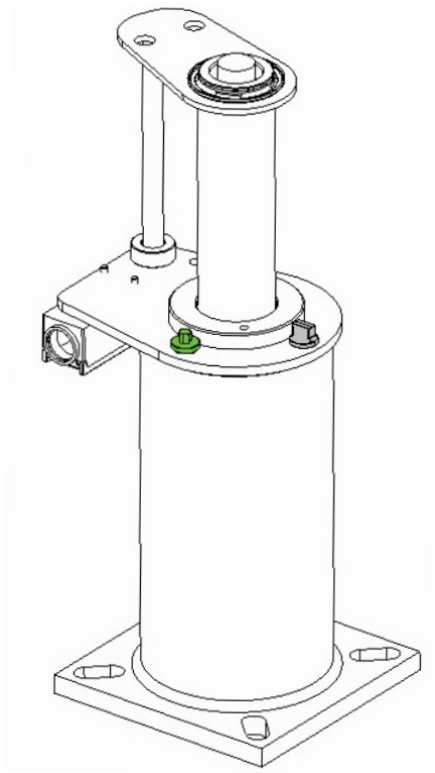

Figure 5

The oil must be within the correct operating range for the buffer to perform correctly.

If further oil is required after checking repeat steps 1-8.

The buffer now needs to stand for at least 30 minutes; this allows the oil to settle.

Oil Checking Procedure

The oil level must be correct and needs to be checked using the following procedure:

1. Unscrew the dipstick and remove from the buffer. (GREY on figure 5)
2. Wipe dipstick clean.
3. Re-insert the dipstick DO NOT screw down.
4. Remove dipstick and inspect level. The oil level needs to be between the minimum and maximum marks indicated on the dipstick as shown in figure 4.
5. Once oil level is correct replace dipstick and securely fasten.

Final Commissioning

Oleo recommends the final 7 step process is followed prior to commissioning:

1. Ensure oil level is correct.
2. Ensure striker is vertically aligned to ±0.5mm.
3. Complete electrical connections to the limit switch.

WARNING

As a safety critical component , buffers should not be installed without a switch.

WARNING

DO NOT overfil past the maximum dipstick mark. If this occures, then oil must be removed from the buffer.

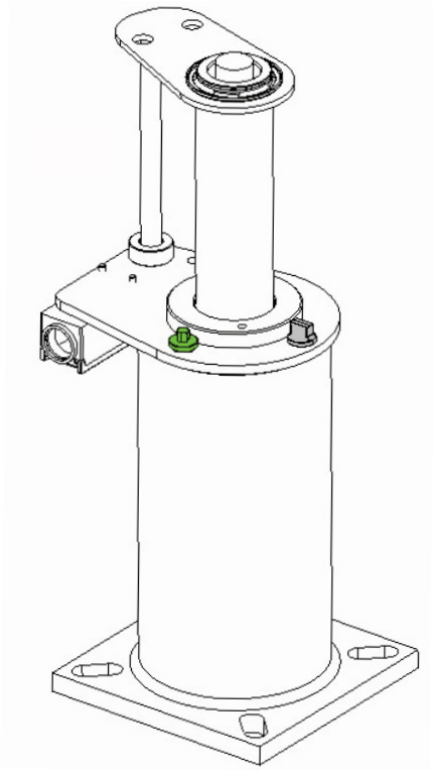

Figure 5

4. Compress the buffer at slow speed across the full working stroke then allow to recoil.
5. Allow the oil to settle for 30 minutes then recheck oil level - see oil checking procedure.
6. Finally, impact the buffer at the full rated speed of the elevator.
7. Complete final checks of oil level and the buffer is at correct working height.

NOTICE

CHECK: The maximum overall height against table below MLB 16-25 +0/-8.8mm of the figure stated.

If the buffer has not returned to the fully extended position (determined by measuring overall height) contact Oleo International.

Buffer Model	MLB 13	MLB 16	MLB 18	MLB 20	MLB 25
Extended Height					
m	0.4103	0.5323	0.6343	0.7823	1.1643
in	16.154	20.957	24.972	30.799	45.839

Maintenance

Oleo recommends the following be carried out every 12 months from installation:

1. Clean away debris and dirt from around the plunger and switch.
2. Check the oil level is correct.
3. Compress the buffer across its full working stroke.
4. After the compression, ensure the buffer has returned to its correct working height and visually check for any damage.

Ensure regional jurisdictions and laws for maintenance are adhered to.

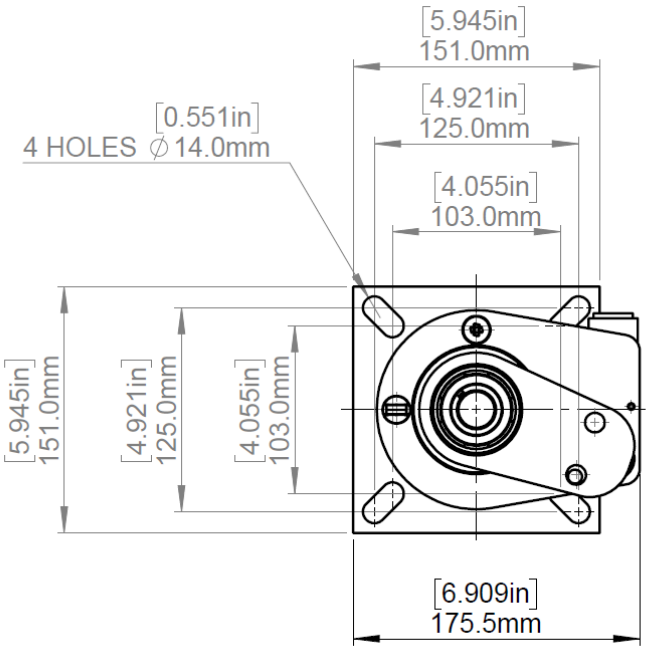

LB SERIES

Medium and High Speed (315-1200 fpm)

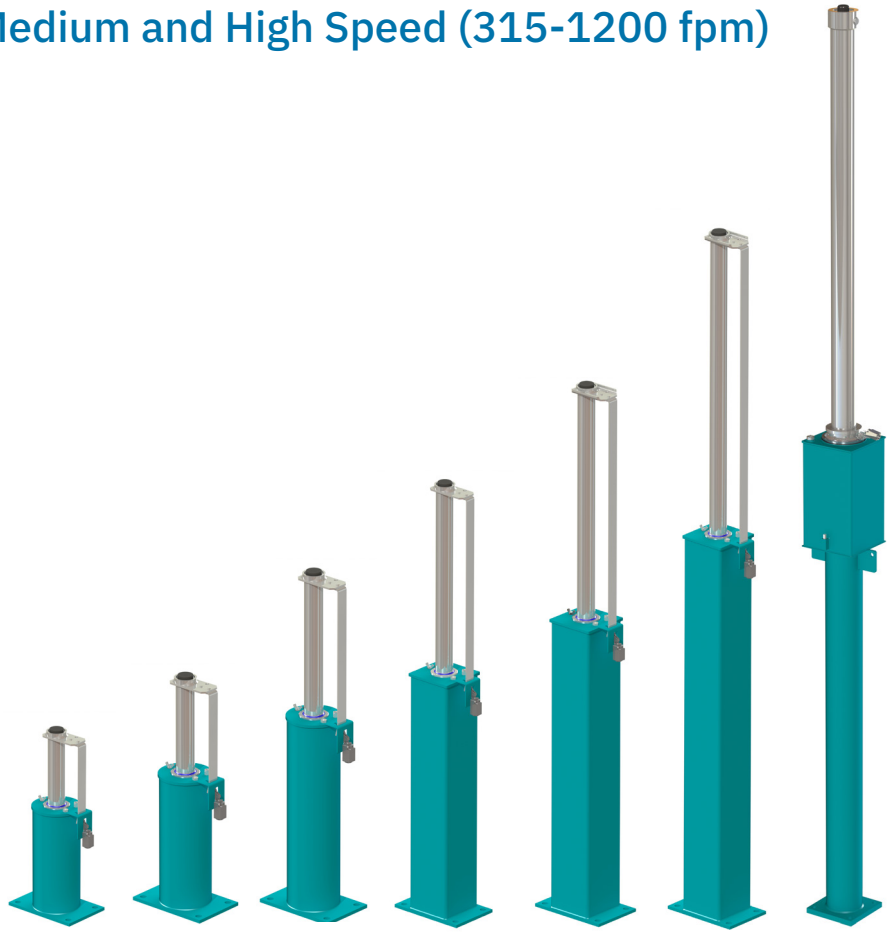

The Oleo Oil Buffer LB series incorporates gas spring technology to provide a premium and robust passenger safety solution for medium to high speed, high mass elevators.

Oleo buffers are designed and built according to strict engineering standards, universally approved and globally certified.

LB buffers have been installed into thousands of landmark buildings since they were introduced more than 30 years ago.

- LB 16
- LB 18
- LB 20
- LB 25
- LB 32
- LB 35
- LB 40
- *LB 50
- *LB 55
- *LB 60

** Special Order*

Specifications

Product	LB 16	LB 18	LB 20	LB 25	LB 32	LB 35	LB 40
Rated Speed	**300**	**350**	**400**	**500**	**600**	**700**	**800**
Stroke	7.99″	9.8″	11.81″	18.19″	27.52″	34.69″	44.92″
Overall Height	24.3″	28.5″	33″	47.7″	67.2″	83″	106″
Compressed Height	15.6 ″	17.9″	20.5″	28.8″	38.9″	47.6″	60.4″
Min Load (lbs)	1102	1102	1102	1102	1543	2204	2204
Max Load (lbs)	18364	18364	18364	18364	18364	18364	18364
Ship Wt (lbs)	53	59	64	86	122	147	181
Delco SKU	C-11-3300	C-11-3350	C-11-3400	C-11-3500	C-11-3600	C-11-3700	C-11-3800

LB HANDLING

When handling LB buffers ensure your regional health and safety laws are adhered to.

Use the Eye Bolt when lifting Oleo LB buffers, shown in Figure 1.

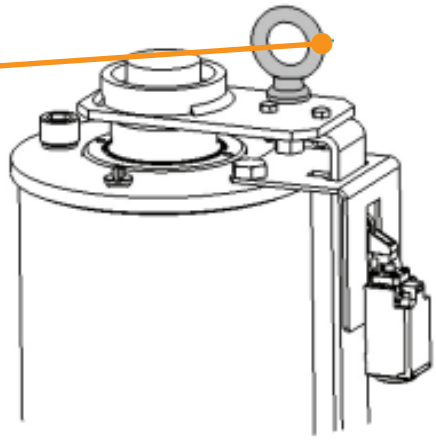

Figure 1

Always confirm the weight of the buffer to be lifted and ensure that a suitable lifting method is used.

WARNING

DO NOT lift buffer with the striker or switch bracket shown in Figure 2. Avoid contact as this may cause damage.

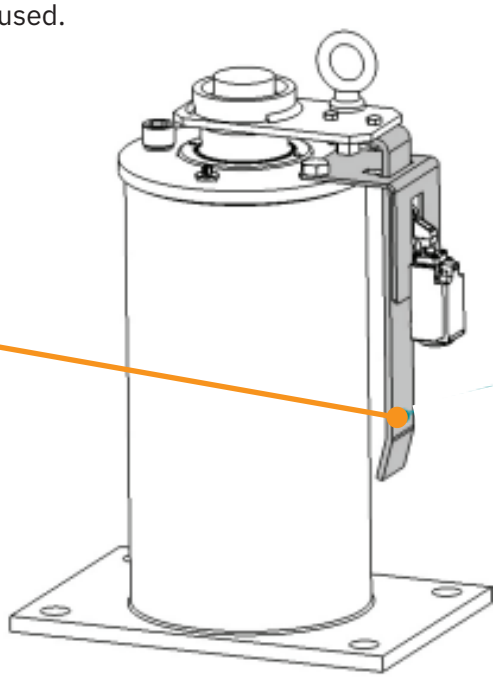

Figure 2

Scope of Delivery

- Oleo buffers are supplied with a standard finish suitable for a dry conditions (finished Oleo Green Primer). The standard finish is not suitable for wet, corrosive conditions.

Oleo LB buffers are supplied without oil.

Should there be any discrepancies contact Oleo International before proceeding.

Indication of Use

- Environmental temperature acceptable conditions in line with EN81-20 (0.4.16) Ambient Temperatures.

WARNING

The Oleo LB elevator buffer is supplied containing compressed gas, the plunger is held in the fully compressed condition during transportation by means a bolt, this should not be removed until the buffer is in its final installed position.

Installation Procedure

- Ensure the buffer has been secured into this installation position.
- Oleo recommends a bold size M16 for fixing and all four fixing positions are used.
- Ensure this area at the base of the buffer, shown in figure 3 is supported.
- At this point the buffer is still compressed in its transportation state, now the buffer can be released by removing the eye bolt. The following is the recommended removal procedure.
- For a controlled release, lower the elevator car (or equivalent) onto the buffer leaving the eye bolt exposed. This mass must be at least equivavelt to the minimum mass of the specified buffer.
- Minimum mass of the buffer show on the table below:

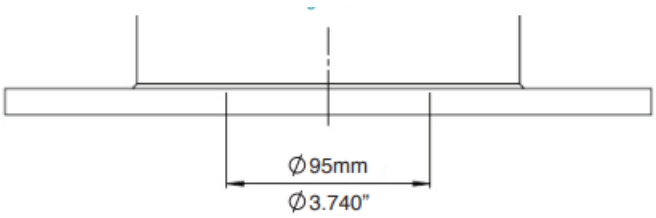

Figure 3

Buffer Model	LB 16	LB 18	LB 20	LB 23	LB 25	LB 32	LB 35	LB 40
Min. Mass								
kg	500	500	500	500	500	700	1000	1000
lbs	1102	1102	1102	1102	1102	1543	2205	2205

Installation Procedure (Continued)

- To release the plunger, undo the eye bolt. See Figure 4.
- Discard transportation eye bolt and spacer shown in Figure 4.
- If used, remove the elevator car (or equivalent) and this will control the recoil of the buffer.
- After periods of being held in the compressed state during transportation and storage, the plunger may require assistance to initially extend. This should be done using a rubber dead blow mallet to tap the underside of the buffer head (GREEn in Figure 4) at 90 degree intervals until the plunger extends.
- Once fully extended and stroked the buffer will perform as designed.
- Buffers are to be fitted vertically parallel to guide rail ± 5mm.

DANGER

Now to release the plunger.
DO NOT stand over the plunger for releasing.

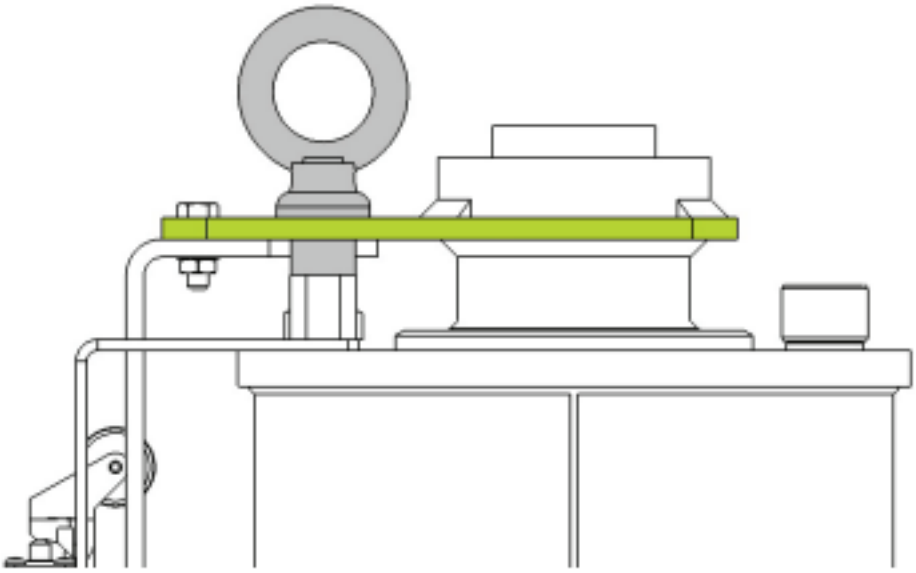

Figure 4

Oil Specification

The oil must conform to the specification on the buffer data plate - ISOVG68 : SG.88/90 at 15 °C : hydraulic.

Pour Point : 18 °C or lower. Viscosity index 75 or higher.

CAUTION

Take care when handling the oils.
Observe the oil manufactures recommendations.

The oil volume guide can be found in the table below:

Buffer Model	LB 16	LB 18	LB 20	LB 23	LB 25	LB 32	LB 35	LB 40
Approximate Oil Volume								
Litres	4.62	5.58	6.64	8.45	10.0	20.0	24.5	31.5
US Gallons	1.22	1.47	1.75	2.23	2.64	5.28	6.47	8.32

Minimum & Maximum

The oil level needs to be between the Minimum and Maximum marks indicated on the dipstick as shown in Figure 5 for LB16 - LB25 or Figure 6 for LB32 - LB40.

Figure 5
LB16 - LB25 Dipstick

Figure 6
LB32 - LB40 Dipstick

Oil Filling Procedure: LB16 - LB25

NOTICE

The buffer must be vertical and fully extended before filling with oil.

CAUTION

Take care when handling the oils.
Observe the oil manufactures recommendations.

1. Unscrew the airscrew, remove from the buffer and keep safe (GREEN in Figure 7).
2. Unscrew the dipstick, remove from the buffer and keep safe. (GREY in Figure 7)
3. Gradually fill the buffer with oil until the oil level is visible between the minimum and maximum levels on the dipstick (indicated on Figure 5)
4. Allow the buffer to stand for a minimum of 30 minutes.
5. Re-insert the dipstick DO NOT screw down.
6. Remove dipstick and inspect level. The oil level needs to be between the minimum and maximum marks indicated on the dipstick as shown in Figure 5.
7. Once oil level is correct, replace dipstick and securely fasten.

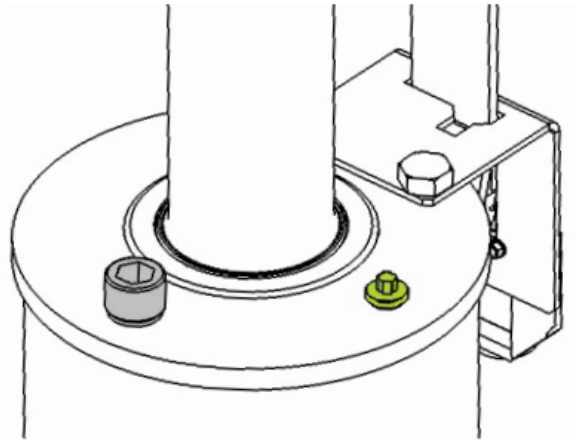

Figure 7

The oil must be within the correct operating range for the buffer to perfom correctly.

If further oil is required after checking, repeat steps 1-8.

WARNING

DO NOT overfill past the maximum dipstick mark.

If this occurs, then oil must be removed from the buffer.

Oil Filling Procedure: LB32 - LB40

NOTICE

The buffer must be vertical and fully extended before filling with oil.

CAUTION

Take care when handling the oils.
Observe the oil manufactures recommendations.

1. Unscrew the air plug. remove from the buffer and keep safe (GREEN in Figure 8).
2. Remove the dipstick, from the buffer and keep safe. (GREY in Figure 7)
3. Remove the rubber plug, shown in Figure 9 from the dipstick and discard.
4. Gradually fill the buffer with oil until the oil level is visible between the minimum and maximum levels on the dipstick (indicated on Figure 6)
5. Allow the buffer to stand for a minimum of 30 minutes.
6. Re-insert the dipstick and clip down (indicated in Figure 10)
7. Remove dipstick and inspect level. The oil level needs to be between the minimum and maximum marks indicated on the dipstick as shown in Figure 6.
8. Once oil level is correct, replace air plug and securely fasten.
9. Once oil level is correct, replace dipstick and securely fasten. (indicated in Figure 10)

The oil must be within the correct operating range for the buffer to perfom correctly. If further oil is required after checking, repeat steps 1-9.

WARNING

DO NOT overfill past the maximum dipstick mark.

If this occurs, then oil must be removed from the buffer.

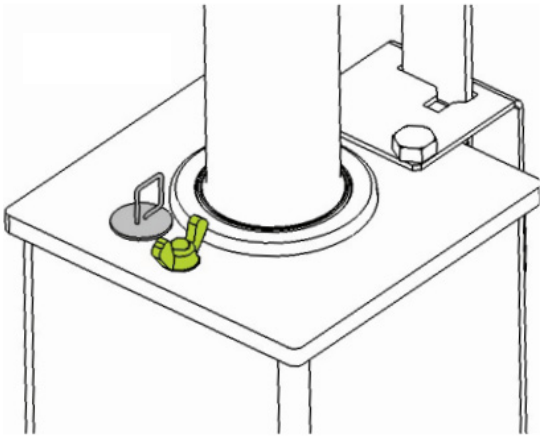

Figure 8

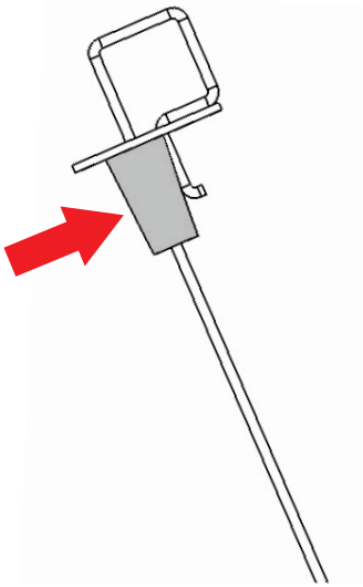

Figure 9

Oil Checking Procedure: LB16 - LB25

The oil level must be correct and needs to be checked using the following procedures:

1. Unscrew the dipstick and remove from the buffer. (GREY in Figure 7).
2. Wipe dipstick clean.
3. Re-insert the dipstick DO NOT screw down.
4. Remove dipstick and inspect level. The oil level needs to be between the maximum and minimum marks indicated on the dipstick as shown in Figure 5.
5. Once oil level is correct, replace dipstick and securely fasten.

The oil must be within the correct operating range for the buffer to perfom correctly.

If further oil is required after checking, refer to Oil Filling Procedure on Page 18.

Figure 5
LB16 - LB25 Dipstick

WARNING

DO NOT overfill past the maximum dipstick mark.

If this occurs, then oil must be removed from the buffer.

Oil Checking Procedure: LB32 - LB40

The oil level must be correct and needs to be checked using the following procedures:

1. Unscrew the dipstick and remove from the buffer.
2. Wipe dipstick clean. (GREY in Figure 8)
3. Re-insert the dipstick and clip down.
4. Remove dipstick and inspect level. The oil level needs to be between the maximum and minimum marks indicated on the dipstick as shown in Figure 6.
5. Once oil level is correct, replace dipstick and clip down. (indicated in Figure 10)

The oil must be within the correct operating range for the buffer to perfom correctly.

If further oil is required after checking, refer to Oil Filling Procedure on Page 19.

WARNING

DO NOT overfill past the maximum dipstick mark.

If this occurs, then oil must be removed from the buffer.

Figure 6
LB32 - LB40 Dipstick

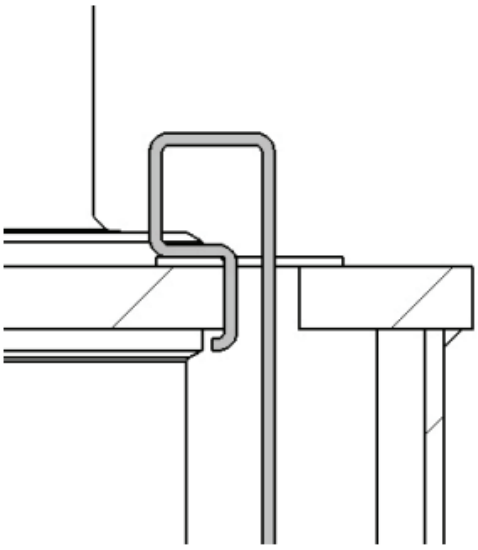

Figure 10

Final Commissioning

Oleo recommends the final 7 step process is followed prior to commissioning:

1. Ensure oil level is correct.
2. Ensure striker is vertically aligned to ±0.5mm.
3. Complete electrical connections to the limit switch.
4. Compress the buffer at slow speed across the full working stroke then allow to recoil.
5. Allow the oil to settle for 30 minutes then recheck oil level - see oil checking procedures.
6. Finally, impact the buffer at the full rated speed of the elevator.
7. Complete final checks of oil level and the buffer is at correct working height.

WARNING

As a safety critical component , buffers should not be installed without a switch.

NOTICE

CHECK: The maximum overall height against table below +0/-9mm of the figure stated.

NOTICE

If the buffer has not returned to the fully extended position (determined by measuring overall height) contact Oleo International.

Buffer Model	LB 16	LB 18	LB 20	LB 23	LB 25	LB 32	LB 35	LB 40
Extended Height								
m	0.6166	0.7229	0.8389	1.0379	1.2109	1.7059	2.1079	2.6929
in	24.276	28.461	33.028	40.862	47.673	67.161	82.988	106.020

Final Commissioning

Oleo recommends the following be carried out every 12 months from installation:

1. Clean away debris and dirt from around the plunger and switch.
2. Check the oil level is correct.
3. Compress the buffer across its full working stroke.
4. After the compression, ensure the buffer has returned to its correct working height and visually check for any damage. See correct working height in table on page 22.

Ensure regional jurisdictions and laws for maintenance are adhered to.

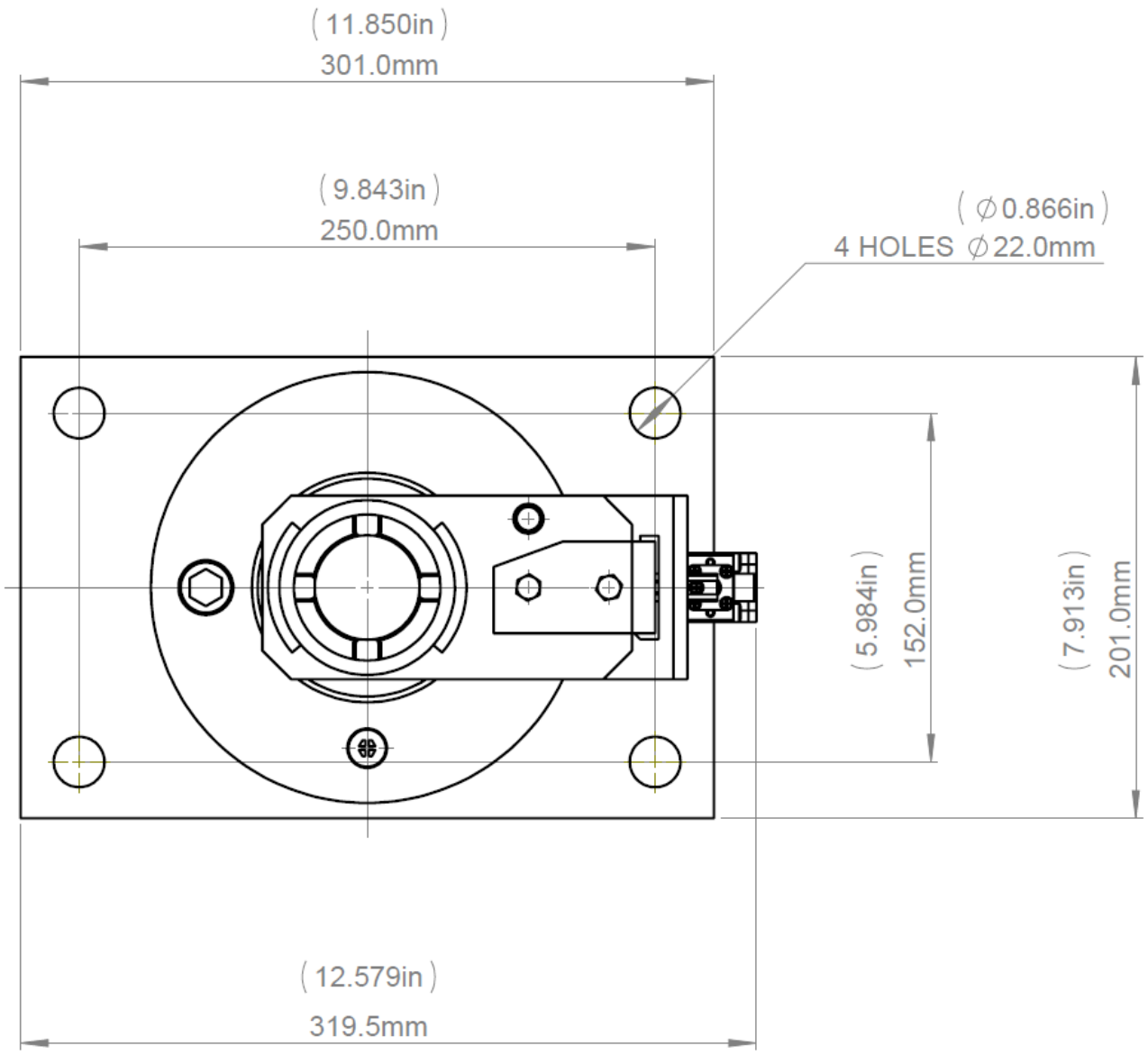

LB BASE DIMENSIONS

PRODUCT LINE

In Stock, Non-Proprietary, Proven & Competitive

Product Line:

- Haider Drive Elevator Machines
- New Construction Packages
- Governors
- Roller Guide Assemblies
- Oleo Oil Buffers
- Shackles
- Safety Barricades
- Cartop and Run Stations
- Limit Switches
- Door Detectors
- Door Closers
- Boards, Parts and Tools

The Delco Difference

- **In Stock:** We keep our components stocked to make sure that customers receive what they need, when they need it.
- **Non-Proprietary:** Delco's products are universal – perfect for modernizations.
- **24 Hours:** From when you place your order until it's picked, packed and shipped out the door.
- **Proven Products:** Delco manufactures and distributes products that are tried, tested and proven in the field.
- **Compliant:** Delco products and equipment meet all elevator industry compliance and certification standards.
- **Value for Money:** In a highly competitive marketplace, Delco provides the best quality elevator equipment at the lowest possible prices.
- **Personal, Knowledgeable Staff and Service:** Always on hand to assist you with your unique requirements!
- **US and Canadian Locations:** No hassles, no border crossings, no tariffs, no waits... your order will be fulfilled and shipped in country.

HOW TO ORDER

Delco services elevator contractors and OEMs in Canada, the Caribbean and the US, including Puerto Rico and Hawaii.

OFFICE & WAREHOUSE CANADA
#205-3765 1st Avenue
Burnaby, BC V5C 3V8

WAREHOUSE USA
2302 West Valley Highway North,
Suite 300, Auburn, WA 98001

Phone: 1.604.904.3727 - CAN/USA
Toll Free: 1.866.900.3727
Email: info@delcoelevator.com
www.delcoelevator.com

We look forward to welcoming you to our family of customers and friends.

We'd love to hear from you and give you a quote on your next project.
Call, email or visit us today!