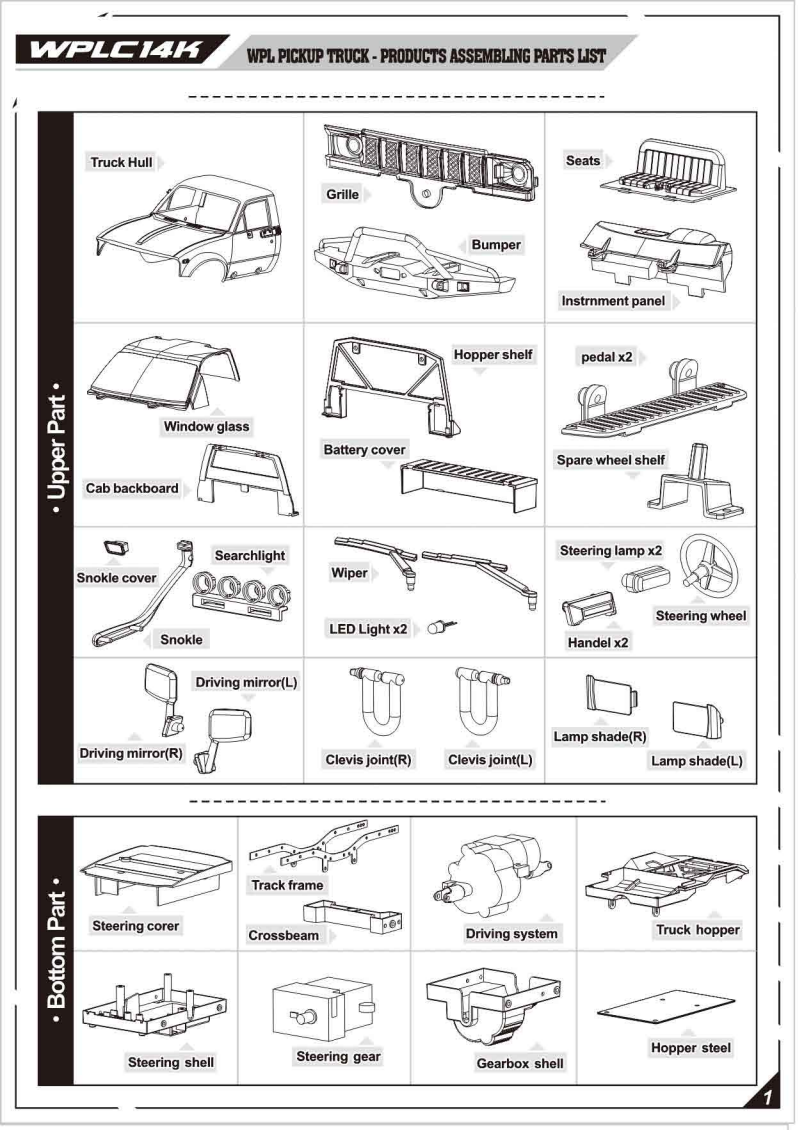

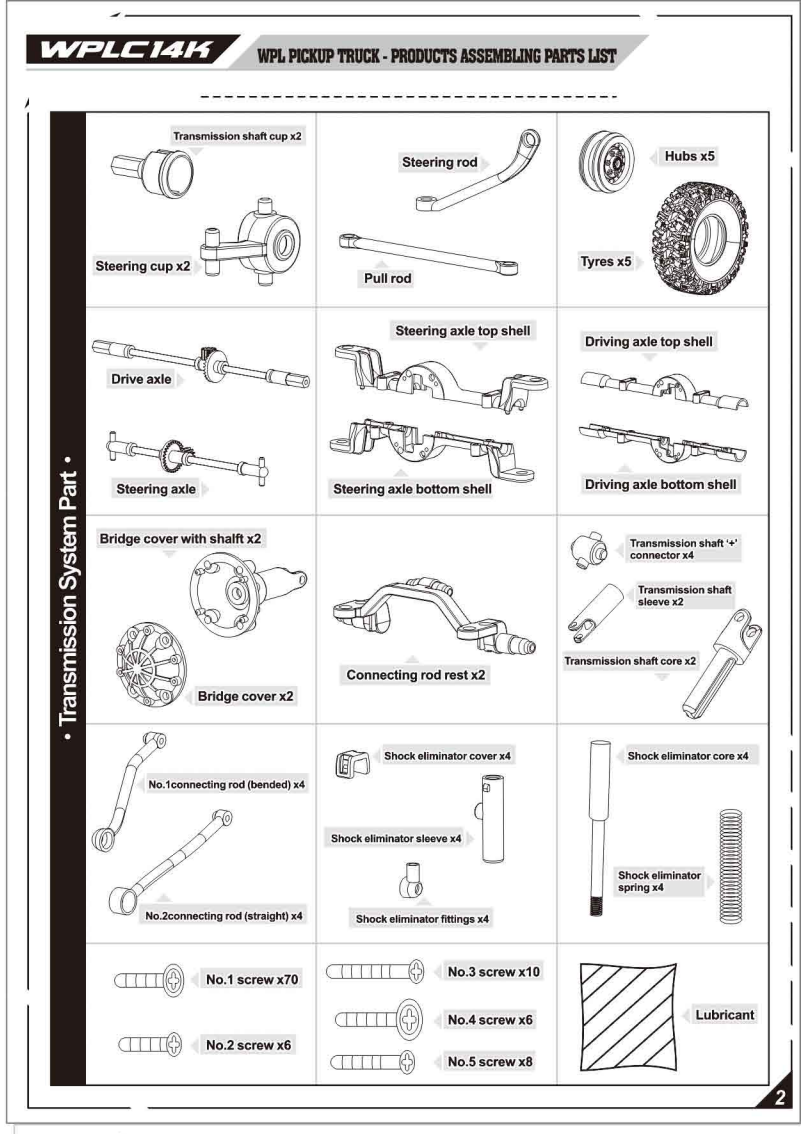

• Installation method of shock eliminator + truck bottom •

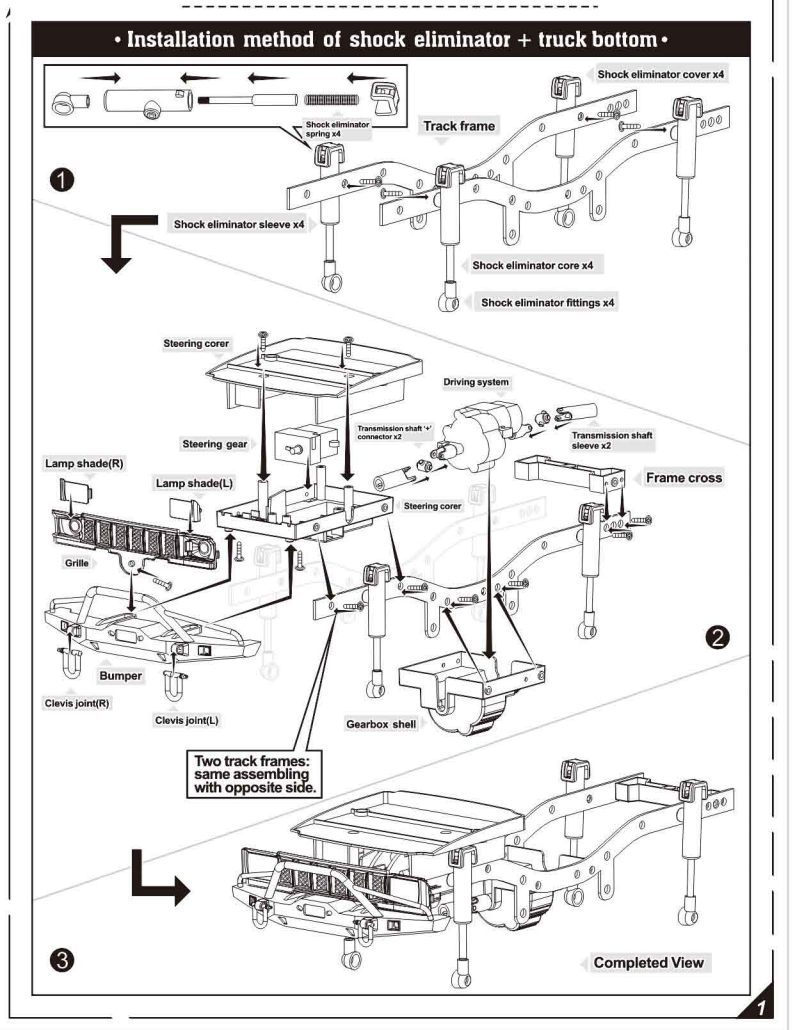

• Installation method of transmission system •

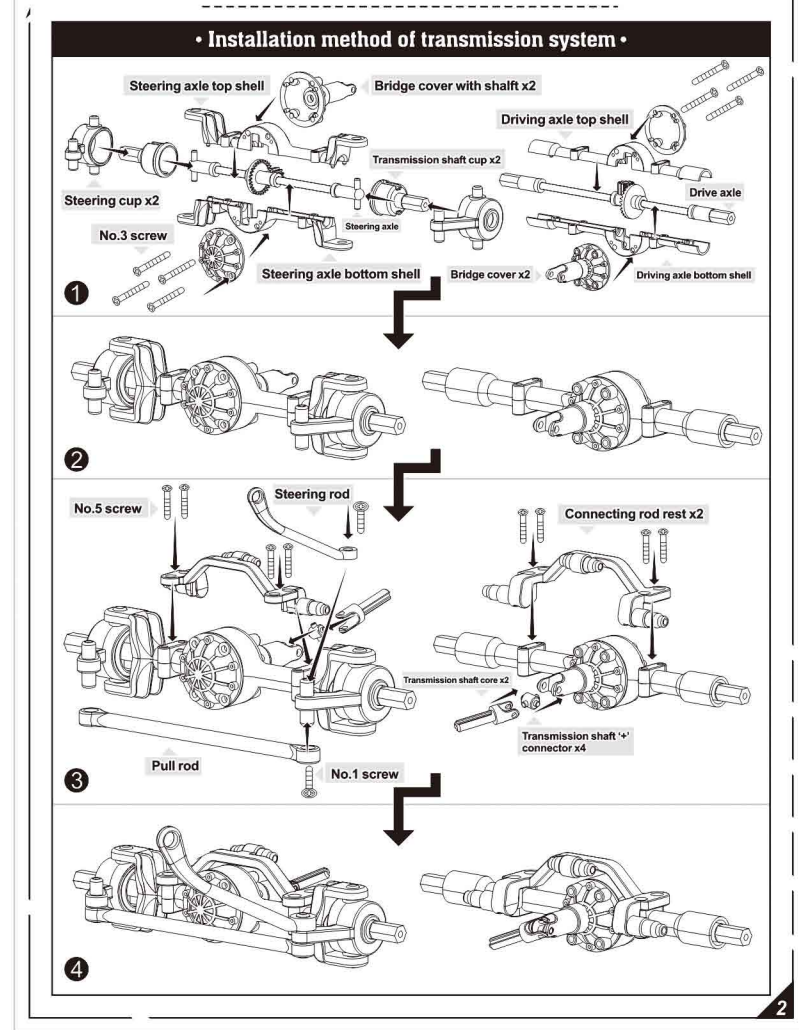

• Installation method of connecting rod + transmission shaft + truck bottom •

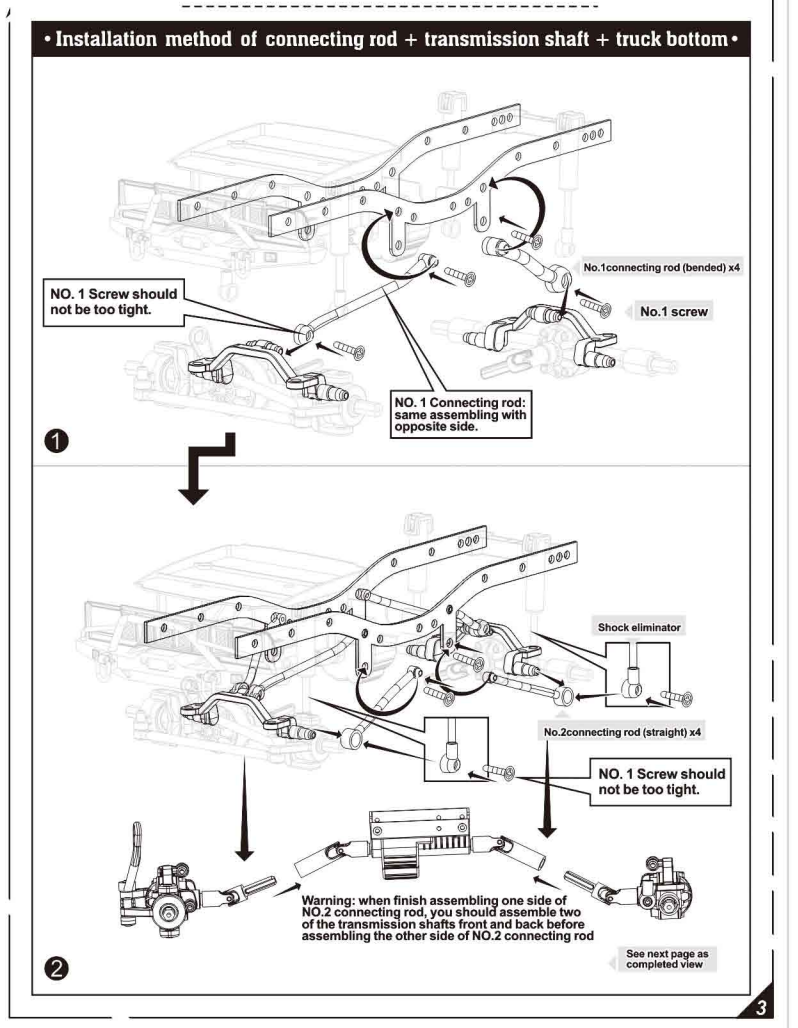

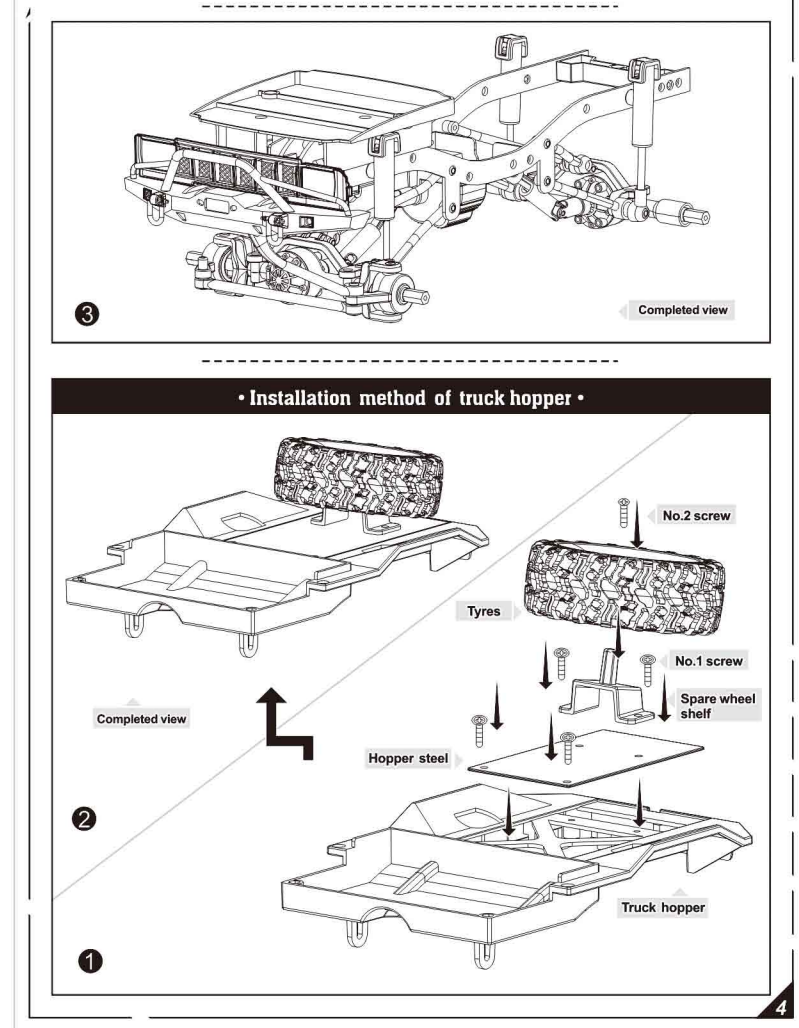

• Installation method of truck hull •

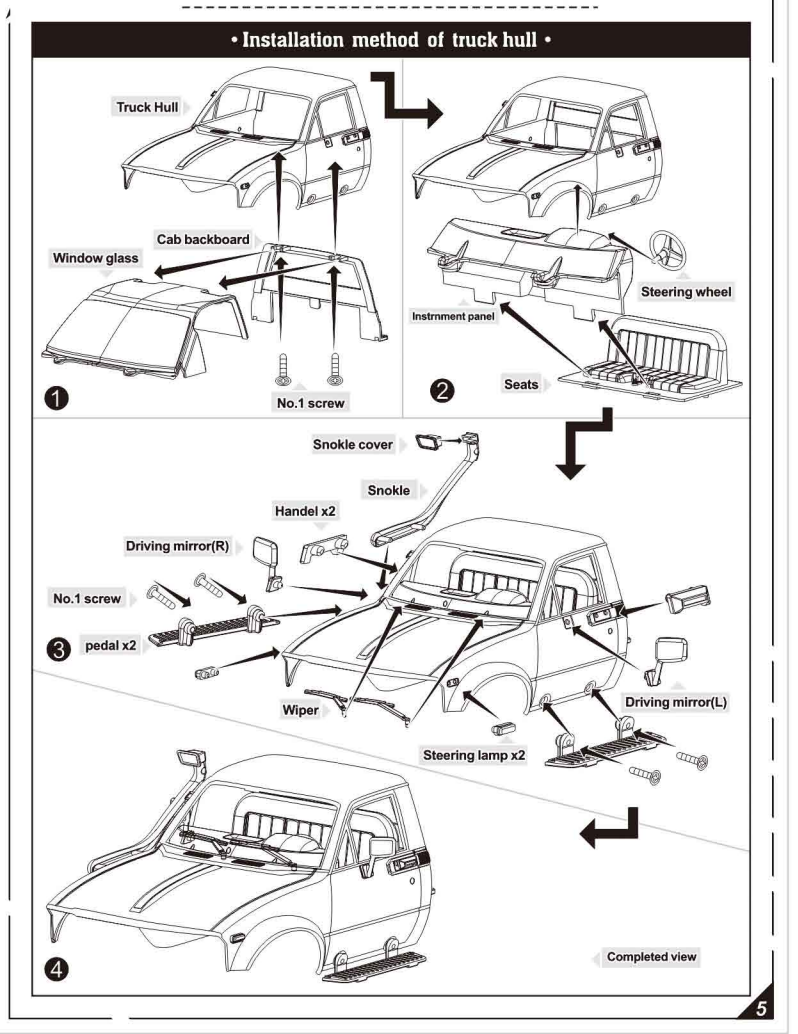
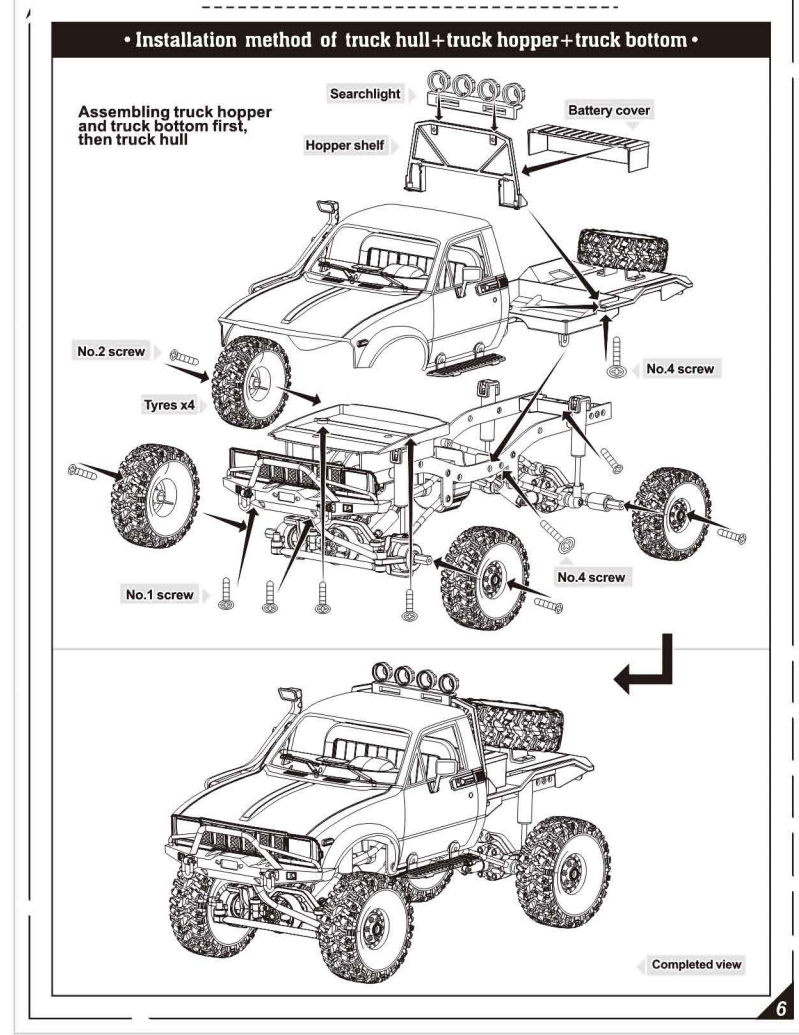
• Installation method of truck hull+truck hopper+truck bottom •