Outdoor Fireplaces

OFP7972S1 and OFP7972S2 Dimensions (Outdoor Fire Place)

OFP7972S1
(Millivolt/Natural Gas) Convert to LP with Conversion Kit 72OB-CKLP

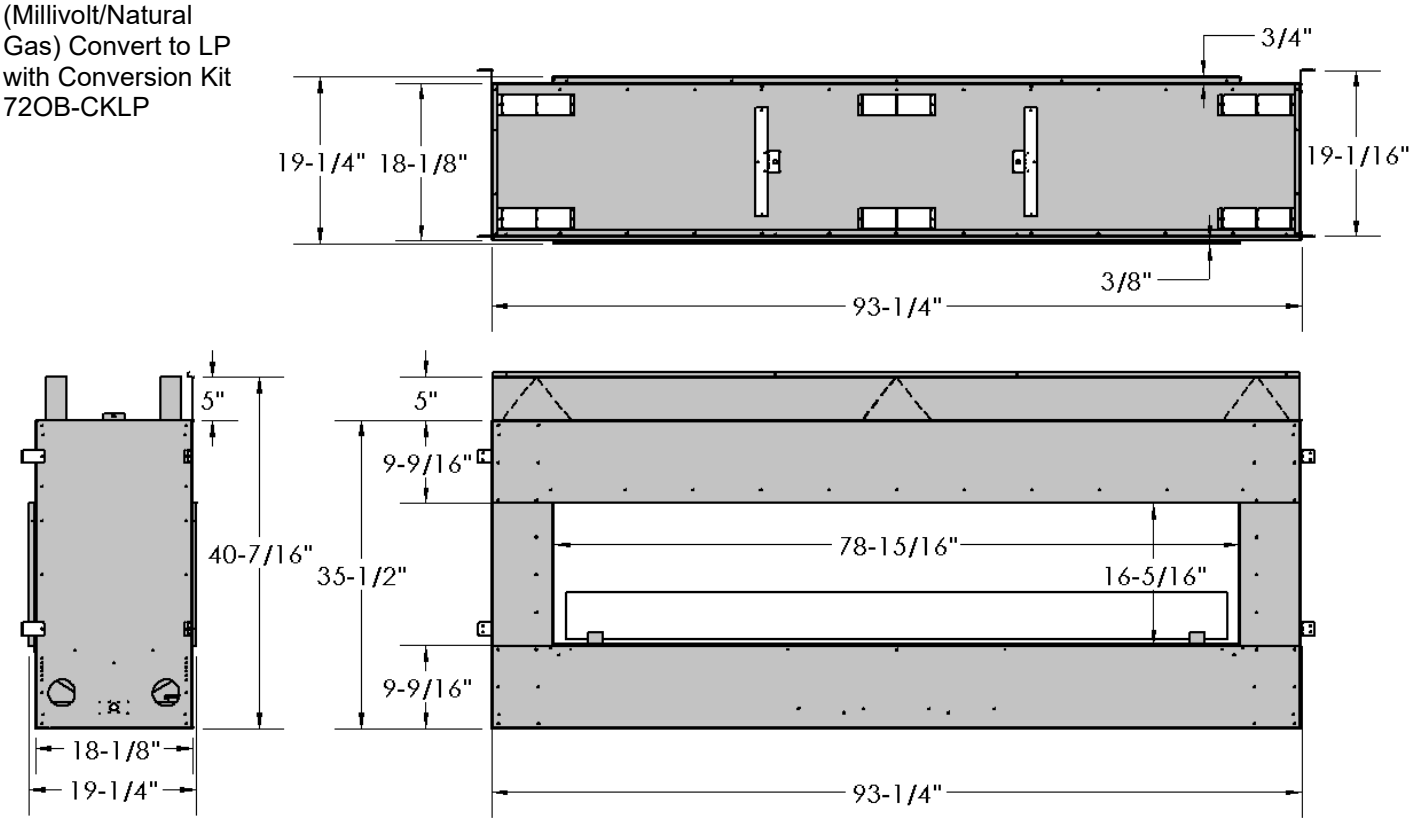
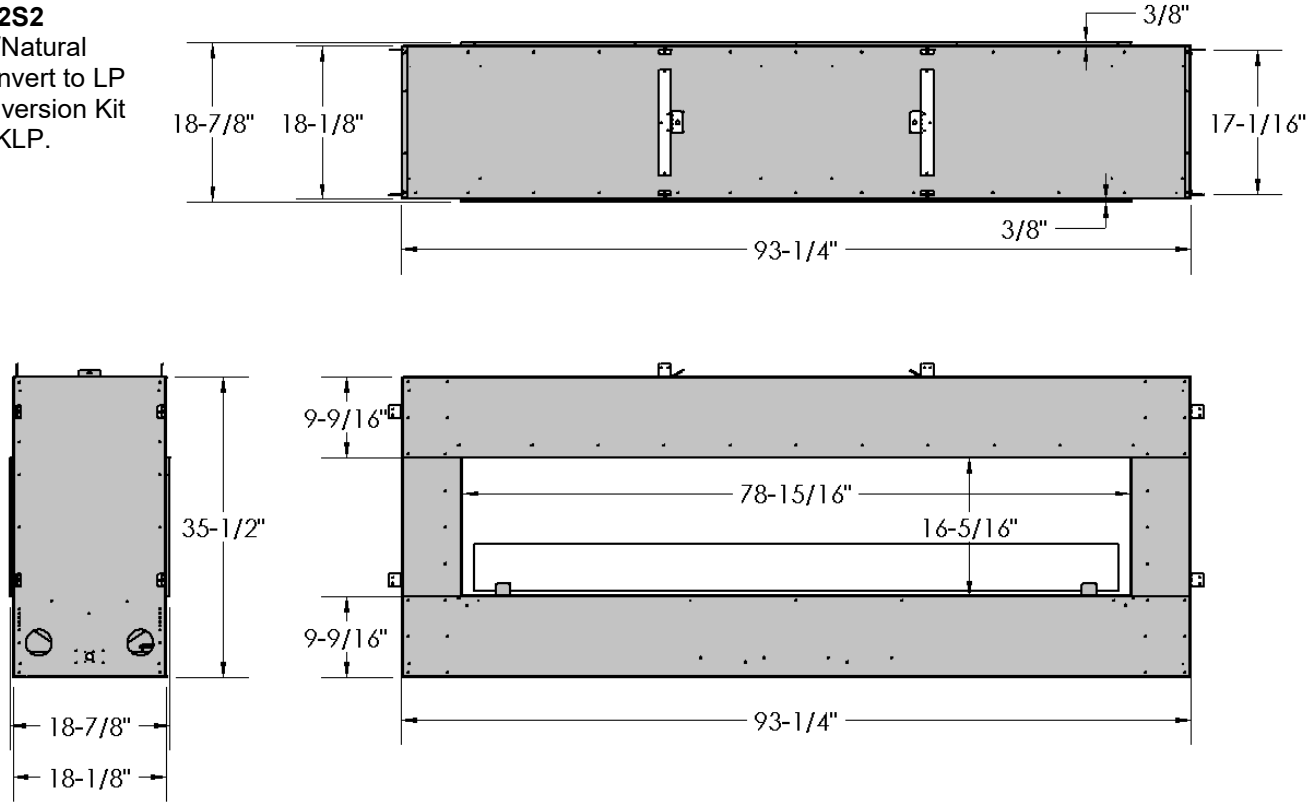
OFP7972S2
(Millivolt/Natural Gas) Convert to LP with Conversion Kit 72OB-CKLP.