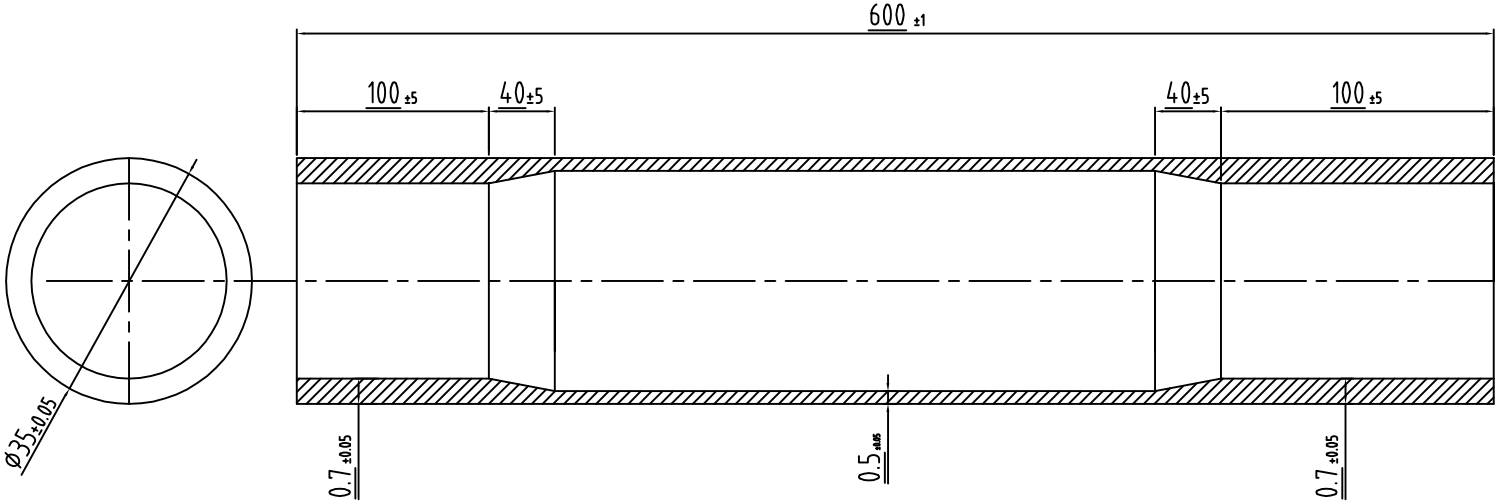

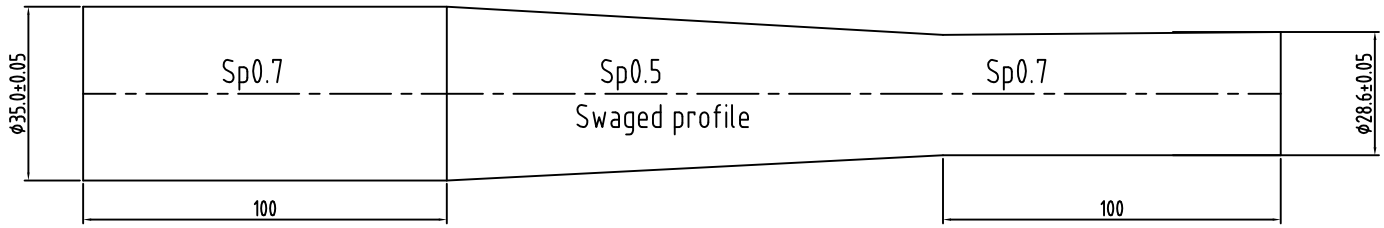

Rev.	Description	Date	Approved
×	×	×	
×	×	×	
×	×	×	
×	×	×	
×	×	×	
×	×	×	

Format A4

Sheet ×

Scale

Material: Omnicrom

Weight: ×

Heat treatment

Finishing: ×

Fillets not dimensioned: ×

Dim without tollerances: ×

Replace: ×

Description: TT Ø35 0.7/0.5/0.7 L=600 Tapered 28.6

Code: SLFG11600125001

Drawing N°

Drawn by	Date	Checked by	Approved by

File name: ×

DO NO DISCLOSE TO OR DUPLICATE FOR OTHERS EXCEPT AS AUTHORIZED BY GRUPPO