Get to know your Urozetta

Urozetta 2 Cloud Mobile WiFi

About Urozetta 2 Cloud Mobile WiFi *U2A

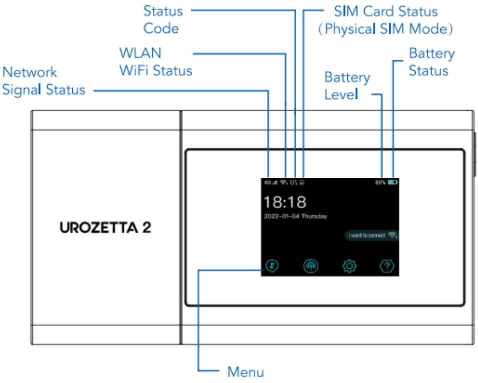

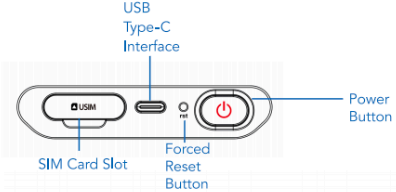

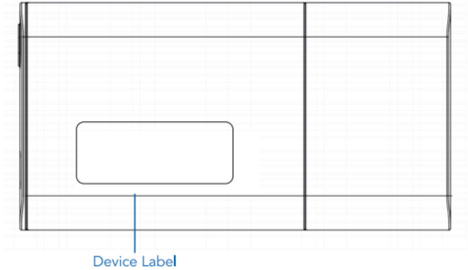

*U2B

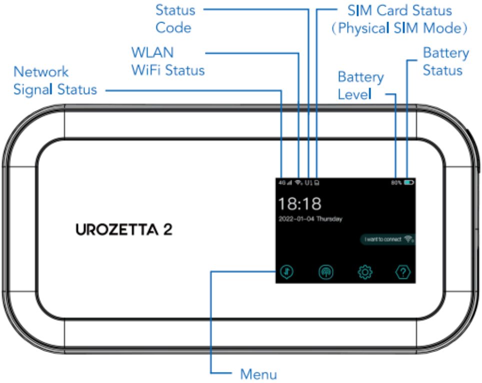

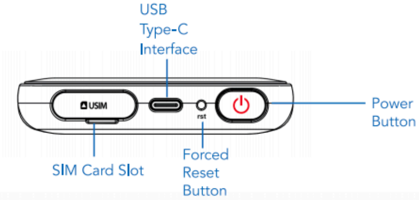

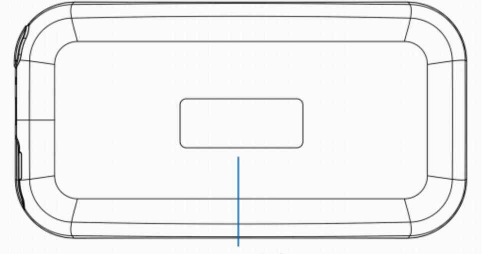

1. Buttons

⏻

Power Button

Hold the Power Button for more than 3 seconds to power on/off the device. Press to turn the screen on or off.

○
rst

Forced Reset Button

Use a pin (not provided) to press the reset button for more than 8 seconds to force power off.

Screen Lock

After 60 seconds without use, the device screen will lock. After 90 seconds without use, the screen will turn off. To lock and turn off the screen, just press the power button.

Unlock Screen

Press the power button to turn on and unlock the Screen.

2. How to connect a device to your UROZETTA WiFi Network

1. WiFi Network Manual Connection

   (1) Find the SSID and KEY displayed on the bottom label of the UROZETTA WiFi device.

   (2) Select the SSID and enter the KEY on your phone or any other device to connect to the network.

Note: If the SSID and the KEY displayed on the bottom label of the device are worn off and cannot be viewed clearly, you can start the UROZETTA WiFi device and view it in "Home"-> "Network" ◉ -> "WLAN".

2. Code Scan Connection (Camera Scanning)
   (1) Start up your UROZETTA WiFi device and enter the Home screen.

   (2) Press the "I want to connect " button at the middle right of the screen to enter the code scanning page.

   (3) Scan the QR code with your phone.

   (4) Your phone will automatically connect to the network upon scanning.

3. WPS One-Press Connection
   (1) Turn on the "WPS" function in the settings of your phone or other device you want to connect.

   (2) Press the "I want to connect " button at the bottom right of UROZETTA WiFi device`s screen to enter the connection mode selection page.

   (3) Select "WPS connection" to enter the WPS network operation page, and Press the " ↻ " button to activate the WPS network function of UROZETTA WiFi device.

   (4) Your phone or other device should automatically find the network. After the confirmation prompt pops up on your phone or other device, Press "OK" to connect to the network.

   Note: This feature is only available on Android devices.

3. Use of SIM card slot

1. UROZETTA WiFi device supports "Physical SIM " mode and "Virtual SIM "mode. You can change the setting by navigating to "Home"-> "Network "->" SIM Card Mode".

2. In the" Physical SIM " mode, a SIM card must be inserted to use the UROZETTA WiFi device. Some SIM cards also need an APN to be setup, which should be setup on the WebUI or App. The external card slot does not support switching SIM cards when the UROZETTA WiFi device is on. If you need to use a SIM card, restart the UROZETTA WiFi device after inserting or extracting an external SIM card.

3. In the "Virtual SIM "mode, there is no need to insert a SIM

card into the external card slot. You can purchase a data package through the UROCOMM App, and you can connect to a local network by turning on the UROZETTA WiFi device when you arrive at your destination.

4. Device Management

1. Scan the QR code below to download the Urocomm app. With the app you can easily buy data packages, manage your data, change passwords, set up your device, restart your device, and more.
2. Buying data packages and managing your data are supported for both U2A and U2B.

Scan and Download

5. About WebUI — Change your settings though your web browser

1. Connect to the WLAN WiFi network of your mobile phone or PC device using Urozetta 2 devices.
2. Enter the address "urocomm.info" or “192.168.225.1” in the browser, the default password is: 12345678
3. After logging in, you can use the Web Page to change your password and set an APN, etc.

Urozetta 2A/2B Mobile WiFi Specifications

Product Name	Urozetta 2 Cloud Mobile WiFi	Urozetta 2 Cloud Mobile WiFi
Model No.	U2A	U2B
Dimensions	136*70*13mm	138*71*14mm
Weight	153g	146g
Display	2.0-inch LCD	2.0-inch LCD
	240 x 240 resolution	240 x 240 resolution
Touch Panel	Yes	Yes
Processor	MDM9207,28nm LP Soc process, Cortex-A7, up to 1.3GHZ	MDM9207,28nm LP Soc process, Cortex-A7, up to 1.3GHZ
RAM	256MB	256MB
Storage	512MB ROM	512MB ROM
Cloud MiFi	Yes	Yes
Bands	LTE-TDD: B38/B39/B40/B41 LTE-FDD: B1/B2/B3/B4/B5/B7/B8/B11/B18/B19/B20/B21 WCDMA: B1/B2/B4/B5/B8/B6/B19 GSM: B2/B3/B5/B8	LTE-TDD: B38/B39/B40/B41 LTE-FDD: B1/B2/B3/B4/B5/B7/B8/B11/B18/B19/B21 WCDMA: B1/B2/B4/B5/B8/B6/B19 GSM: B2/B3/B5/B8
WLAN	2.4GIEEE 802.11a/b/g/n/ac	2.4G IEEE 802.11a/b/g/n/ac
Battery	3600mAh lithium battery/Non-removable	3600mAh lithium battery/Non-removable
Connectivity	USB Type-C 5V2A input	USB Type-C 5V2A input
WPS	Yes	Yes
Keys	Power key/Reset hole	Power key/Reset hole
Protection Level	IP53	IP53
Software	linux kernel 3.x	linux kernel 3.x
FOTA SW upgrade	Yes	Yes
Support APP	Yes	Yes
Continuous Working Hours	13 Hours	13 Hours
Working Environment	-10 °C ～ 35 °C	-10 °C ～ 35 °C
Certification	Giteki,PSE,VCCI,CE, WEEEE, ROHS,FCC,CCC,KC	Giteki,PSE,VCCI,CE, WEEEE, ROHS,FCC,CCC,KC

FAQ

1. How do I change the Wifi name and password? You cannot change the Wifi name, but you can change the password of the Wifi in the APP.

2. What should I do when my Phone/Tablet cannot connect with the device?

   (1) Make sure the Phone/Tablet's WLAN is turned on.

   (2) Refresh the network list, and search for the Wifi Name of the device.

   (3) Make sure to input the correct key .

   (4) Disconnect your device from your current network and then reconnect.

3. What should I do when the device has no internet connection?

   (1) Make sure the device status is normal .The signal may be harbors, weaker when in airports, mountain areas, high ways, basements, rural areas and islands. Please restart and try again after moving to a different location.

   (2) If you still can not get an internet connection, please contact us through email: service@urocomm.com

4. What should I do if my device is lost?
   If your device is lost accidentally, please contact customer

service to freeze your account in time to avoid additional fees.

5. Why can I not use my device after a SIM card is inserted? In some countries when you insert a SIM card, you need to manually set an APN （Access Point Name）. If this is the case, please go to the website: urocomm.info or 192.168.225.1, and enter the password 12345678; After entering the Web UI, go to "Menu"-"Apn", manually add a network operator APN, and then save the settings.

Warning

- Please only use original accessories provided with purchase. Use of unauthorized chargers or other accessories may cause damage to the device and can result in fire, explosions, or other hazards.
- If users of the UROZETTA WiFi device use a power adapter to charge the UROZETTA WiFi device, they should purchase a power adapter that meets the requirements of the correspond- ing safety standards or a power adapter that has obtained the quality and safety certification of the country in which it is used.
- Please keep the device in a dry and cool environment and do not let the device come into contact with water. Extreme high or low-temperatures may cause damage to the device.
- Please do not expose the device to high temperature environments or heating, such as strong sunlight, heaters, microwaves, ovens, or water-heaters etc. An overheated battery might cause explosion.
- When charging is complete or the device is fully charged, please disconnect the charger from the device and unplug the charger from the power outlet.
- The built-in battery is non-removable. Please do not attempt to change or disassemble the battery by yourself. This may result in damage to the battery or the device. The battery can only be replaced by an official authorized service provider.
- Notice: Using the wrong model of battery may result in an explosion.

Please make sure to dispose of used batteries as instructed.

- Device Working Temperature: The device should be kept at a working temperature of -10°C to 35°C. For the user's safety, please avoid using the device in a high-temperature environment for long periods of time, as this leads a shorter device lifetime. The device will stop charging automatically when the battery temperature reaches 45°C, and shut down automatically when battery temperature is more than 55°C.

- When using an external SIM card, self-cutting SIM cards and non-standard SIM cards can not be used.

- We are only responsible for the function of the device's official operating system and update system. The use of any other systems or software from unofficial third parties might cause security risks.

FCC Statement

- This equipment has been tested and found to comply with the limits for a Class B digital device, pursuant to part 15 of the FCC Rules. These limits are designed to provide reasonable protection against harmful interference in a residential installation. This equipment generates, uses and can radiate radio frequency energy and, if not installed and used in accordance with the instructions, may cause harmful interference to radio communications. However, there is no guarantee that interference will not occur in a particular installation. If this equipment does cause harmful interference radio or television reception, which can be determined by to turning the equipment off and on, the user is encouraged to try to correct the interference by one or more of the following measures:

— Reorient or relocate the receiving antenna.

— Increase the separation between the equipment and receiver.

— Connect the equipment into an outlet on a circuit different from that to which the receiver is connected.

— Consult the dealer or an experienced radio/TV technician for help.

FCC Radiation Exposure Statement

- This device complies with FCC SAR exposure limits set forth for an uncontrolled environment. SAR compliance for using the equipment in close proximity to the human body has been evaluated at 10mm. This equipment must not be co-located or operating in conjunction with any other antenna or transmitter. End-users and installers must be provide with antenna installation instructions and consider removing the no-collocation statement.

Caution!

- Any Changes or modifications not expressly approved by the party responsible for compliance could void the user's authority to operate the equipment.
- This device complies with part 15 of the FCC Rules. Operation is subject to the following two conditions:

  (1) This device may not cause harmful interference, and

  (2) This device must accept any interference received, including interference that may cause undesired operation.

  Countries:
  (BE/BG/CZ/DK/DE/EE/IE/EL/ES/CY/LV/LT/LU/HU/MT/FR/HR/IT/NL/AT/PL/PT/RO/SI/SK/FI/SE/UK/TR/NO/CH/IS/LI)

RF EXPOSURE INFORMATION (SAR)

- This device meets the government's requirements for exposure to radiowaves.
  — The SAR limit set by the CE is 2.0W/kg
- The highest reported SAR values under the CE regulatory for your device are listed below:
  — Body SAR: 1.051W/kg

Contact

Service Email: service@urocomm.com

Copyright Notice

Urocomm International Limited. reserve the final interpretation of the UROZETTA trademarks for this product.

For More Surprises: Please visit www.urocomm.com

UROCOMM

UROCOMM APP