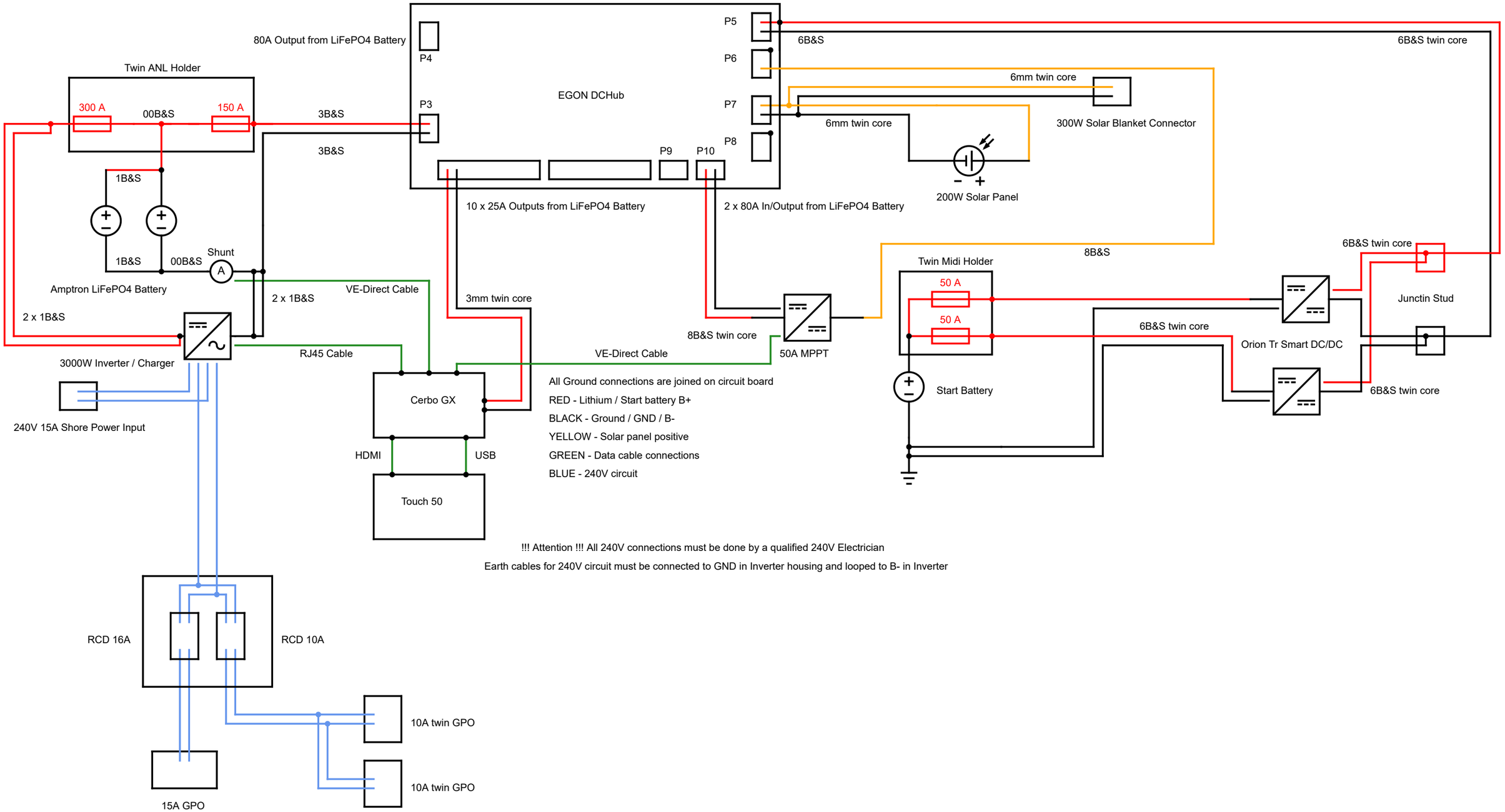
80A Output from LiFePO4 Battery
P4
P3
EGON DCHub
P5
P6
P7
P8
P9
P10
6B&S
6B&S twin core
6mm twin core
300W Solar Blanket Connector
6mm twin core
200W Solar Panel
Twin ANL Holder
300 A
00B&S
150 A
3B&S
3B&S
1B&S
1B&S
00B&S
Shunt
A
Amptron LiFePO4 Battery
2 x 1B&S
2 x 1B&S
VE-Direct Cable
3mm twin core
10 x 25A Outputs from LiFePO4 Battery
2 x 80A In/Output from LiFePO4 Battery
8B&S
Twin Midi Holder
50 A
50 A
6B&S twin core
Junctin Stud
6B&S twin core
8B&S twin core
50A MPPT
6B&S twin core
Orion Tr Smart DC/DC
3000W Inverter / Charger
RJ45 Cable
VE-Direct Cable
Start Battery
6B&S twin core
240V 15A Shore Power Input
Cerbo GX
HDMI
USB
Touch 50
All Ground connections are joined on circuit board
RED - Lithium / Start battery B+
BLACK - Ground / GND / B-
YELLOW - Solar panel positive
GREEN - Data cable connections
BLUE - 240V circuit
!!! Attention !!! All 240V connections must be done by a qualified 240V Electrician
Earth cables for 240V circuit must be connected to GND in Inverter housing and looped to B- in Inverter
RCD 16A
RCD 10A
10A twin GPO
10A twin GPO
15A GPO