INSTALLATION AND OPERATING INSTRUCTIONS
Models 322, 323

WARNING

Improper installation, adjustment, alteration, service or maintenance can cause injury or property damage. Refer to this manual. For assistance or additional information consult a qualified installer, service agency or the gas supplier.

FOR YOUR SAFETY

Do not store or use gasoline or other flammable vapors and liquid in the vicinity of this or any other appliance.

FOR YOUR SAFETY

If you smell gas:

1. **Open Windows**
2. **Do not touch any electrical switches**
3. **Extinguish any open flame**
4. **Immediately call your gas supplier**

Contents

This refrigerator has been designed to operate at the following energy sources:

LP/PROPANE GAS OPERATION - 11.0 ± 0.5" W.C. inches.
AC OPERATION - 120 volts AC (132 v. max., 108 v. min.).
DC OPERATION - [3-WAY MODELS] 12 volts DC (15.4 v. max., 11.5 v. min.).
Operation where these specifications are exceeded may cause damage and will void the warranty.

MODEL NO. _____ SERIAL NO. _____

The location of the model number and serial number may be found attached inside the food compartment of the refrigerator. See Figure 4.

Part No.: 617507F (96-03)

Safety Precautions

Read this manual and become thoroughly acquainted with it before installing or starting the refrigerator. The following safety precautions and recommendations contained herein are for your protection.

Improper installation, adjustment, or operation can cause injury or property damage.

The safety symbols used in this manual contain Safety Alert information. Understand their meanings and be safety conscious.

⚠ DANGER	A SITUATION WHICH, IF NOT AVOIDED, WILL RESULT IN DEATH OR SERIOUS INJURY.
⚠ WARNING	A SITUATION WHICH, IF NOT AVOIDED, COULD RESULT IN DEATH OR SERIOUS INJURY.
⚠ CAUTION	A SITUATION WHICH, IF NOT AVOIDED, MAY RESULT IN MINOR OR MODERATE INJURY.

General

- Keep the unit and surrounding area clean. Never use the area behind refrigerator for storage; in particular, storing flammable materials (oily rags, paper, aerosol cans, and chemicals.). Stored materials not only present a safety hazard but could block the ventilation to the system.
- Provide appropriate fire extinguishers installed in convenient locations. Consult your local fire department for the correct type to use. Do not use foam on electrical fires. Use extinguisher rated by NFPA.
- Make sure all fasteners, supports, seals, electrical covers are secure.

LP/Propane Gas System

- LP/Propane gas is highly flammable. Gas connections must be leak tight. Do not smoke, create sparks or use an open flame when checking gas connections. Do not ignore the "rotten egg" smell of gas fumes.
- Protect all gas lines from physical damage, vibration, or excessive heat.
- Insure that the supply gas pressure is within the tolerance specified on the front cover of this manual. The gas controls are designed for safety. Never tamper with the adjustment or function of the controls other than as directed by the Lighting and Shutdown Instructions. All repairs must be done by a qualified service person.

Exhaust Gases

- Proper ventilation to remove exhaust gases is extremely important. These gases, generated in the GAS mode at the rear of the refrigerator, replace the oxygen in the air and in extreme cases can produce dangerous levels of carbon monoxide. This manual contains installation instructions to safely remove the exhaust gases and seal the zone from the living area. The installation instructions are certified by American Gas Association and Canadian Gas Association and must be followed.
- Check the burner for proper flame characteristics at the initial startup and at least once every year. The information for this check is located in this manual and must be performed by a qualified service person.

Safety Precautions - continued

Electrical Circuits - AC and DC

- The 120 volt AC circuit must be properly grounded. Never cut or remove the round grounding prong from the refrigerator's AC cord. Do not use a two-prong adapter. Do not use an extension cord to connect to the approved AC receptacle.
- Protect all wiring from physical damage, vibration, or excessive heat.
- Always disconnect both AC and DC sources of power (if so equipped) when working on either circuit (only a qualified service person).
- Insure all terminating connections are clean and tight to prevent arcing or overheating.
- Never allow Leak Detecting fluids or any other liquids to spill on electrical connections. Many liquids are electrically conductive and could cause serious arcing damage and, in some case, fires.
- Never overfuse the AC or DC circuits. If fuse replacement is required in the refrigerator's circuit, only use the size and type specified in the replacement parts section of this manual. Overfusing could lead to circuit overheating damage and, in some cases, fires.

Refrigerant System

- Never physically bend, drop, drill, weld or hammer the refrigerant system. Doing so could cause the system to rupture and release dangerous chemicals which can cause severe burns to the eyes or skin. If ignited, these chemicals will burn with intense flame. A leaking system can release certain chromium components which, if inhaled, can cause cancer.
- Never apply direct heat in excess of 240 degrees F. to the refrigerant system. Because the refrigerant is hermetically sealed under pressure, a temperature sensitive safety device opens to protect the system from erupting under excessive pressure. However, the expelled refrigerant could ignite and burn if an ignition source were near.
- Never attempt to repair or recharge the refrigerant system. If defective, it must be replaced.

Child Entrapment

- Never install door locks or other restraints which could entrap small children within the refrigerator. The Travel Latch system must not be modified.

Handling the Refrigerator

- Never lift the refrigerator without assistance. Protect yourself from body strain.
- Avoid hot surfaces at the rear of the refrigerator when operating. The absorption type refrigerator produces several hot areas at the rear of the unit. This is true whether in GAS or ELECTRIC mode.
- Take care to avoid brushing against the irregular shapes and sheet metal parts at the rear of the refrigerator. Cuts or abrasions could result.

NORCOLD **E.S.P.**

EXTENDED COOLING UNIT SERVICE PROTECTION PLAN

An additional four-year Service Contract is now available to original purchasers of Norcold refrigerators. For only $40.00 you get:

* Four extra years protection against cooling unit failure.
* Automatic replacement of defective cooling unit.
* Pre-paid freight from your dealer to Norcold and return.
* Labor free of charge.

The E.S.P. (Extended Service Protection) plan can be obtained by mailing your check for $40.00*, U.S. funds to:

NORCOLD SERVICE CENTER
P O BOX 4248
SIDNEY OH 45365-4248

If mailing in Canada:

GREG LUND PRODUCTS LTD
P O BOX 760
OAKVILLE ONTARIO CANADA L6J 5C4

E.S.P. is a service contract between Norcold and the original purchaser. The contract provides replacement of a defective cooling unit for this refrigerator (freight, parts, and labor) for an additional period of four years after expiration of the original Limited Warranty. Norcold, at their option, will replace either the cooling unit assembly or the entire refrigerator. If the refrigerator is replaced, Norcold is not responsible for replacing dealer installed options. The contract implies no obligation to replace any part of the refrigerator other than the cooling unit. The refrigerator must be delivered to Norcold Service Center together with the Norcold E.S.P. card showing E.S.P. coverage. An E.S.P. card will be mailed to the original purchaser upon receipt of a completed Service Contract Application form and a check covering the E.S.P. charge. E.S.P. coverage is non-transferable and non-refundable.

To register your refrigerator, fill out the warranty Service Contract Application - i.e.: Tear Sheet Form in yellow envelope or include the following information (Please Print Clearly):

1. Owner's Name and Address
2. Refrigerator Model Number
3. Refrigerator Serial Number
4. Date of Purchase
5. Check for $40.00* (Payable to Norcold)

Applications will be accepted only if they are mailed within ninety (90) days after date of purchase.

*Ohio residents, add $2.60 sales tax.

General Instructions - Models 322, 323

The refrigerator described herein is designed and certified for built-in installations.

The refrigerator is to be located on a solid and level floor that is strong enough to support the combined weight of the refrigerator and it's contents. Keep away from direct sunlight and other heat generating sources. In making provisions for the installation, the following must be considered:

a. Adequate ventilation (See section on "Ventilation Requirements").
b. Minimum clearance to combustible materials: 0" back, sides, bottom, & top.
c. Adequate seal between refrigerator mounting flange and cut-out opening (See Figure 5).

⚠ WARNING

This refrigerator is not intended to be operated as a free standing unit (i.e. where the products of combustion are not completely sealed off from the living area) or installed in such a way as to conflict with these installation instructions. Unapproved installations could result in safety risks or performance problems.

Ventilation Requirements

Installation must assure complete isolation of the living space of the mobile home or recreational vehicle and the combustion system of the refrigerator.

Certified installation requires that one lower combustion air intake and one upper exhaust vent be used. Cut-Out dimensions for factory supplied vents are shown in Figure 2. The specified vent kit for this refrigerator must be installed as directed by this manual without modification. Any deviation or substitution other than the specified Norcold vent kit will void this certification and the factory warranty of the refrigerator.

⚠ WARNING

Inadequate ventilation or partial blockage of flue exhaust can produce carbon monoxide while operating in gas mode. Inhaling fumes can cause dizziness, nausea, or in extreme cases, death.

A.G.A./CGA certification permits installing the refrigerator with zero inch (0") minimum clearance at the sides, back, top, and bottom. This certification does not specify any maximum clearance. However, the clearances around the sides and rear should be minimized in order to create a proper air draft necessary for good refrigerator performance. If dimension "A" in Figure 1 exceeds 1", a baffle must be added in the location shown to prevent by-pass air. The condenser and absorber tubes must receive a continual supply of cooler air in order to maintain proper refrigerator cooling. The air passage (ventilation zone) from the lower vent door to the refrigerator coils and from the coils up through the upper vent must be unobstructed. If the air becomes trapped by obstructions, the refrigerator will start to lose its ability to cool. The illustration in Figure 1 shows the installation dimensions to obtain optimum venting. To prevent serious loss of cooling capacity, the upper cutout opening must not drop below the minimum stated dimension of 20 $^5/_8$". It is important to block off the area above the refrigerator cabinet from this ventilation zone (Figure 1) to prevent pockets of hot air from forming. Without adequate ventilation and/or with partial blockage of flue exhaust, incomplete combustion (on GAS operation) can cause carbon monoxide to form. See Warning above.

The lower vent is also to be utilized as a service entrance door. Opening of the lower vent must be flush or below bottom of refrigerator. In the event of a propane leak, the properly installed lower vent door will allow the propane to "Weep" to the outside at the floor level, preventing large pockets of gas from collecting.

Certified Vent Kits

Kit Number	Certified Lower Vent Door	Certified Upper Exhaust Vent	Models
5	617484	617485	322, 323

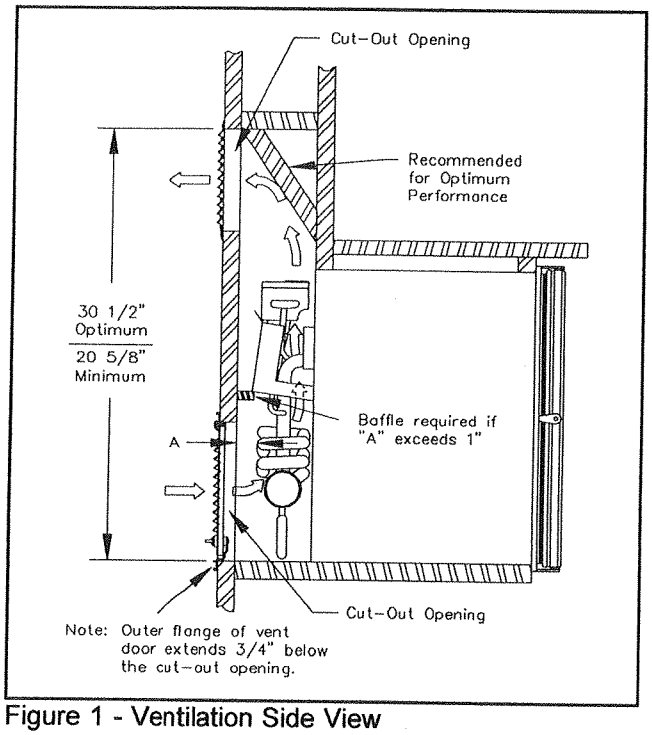

Figure 1 - Ventilation Side View

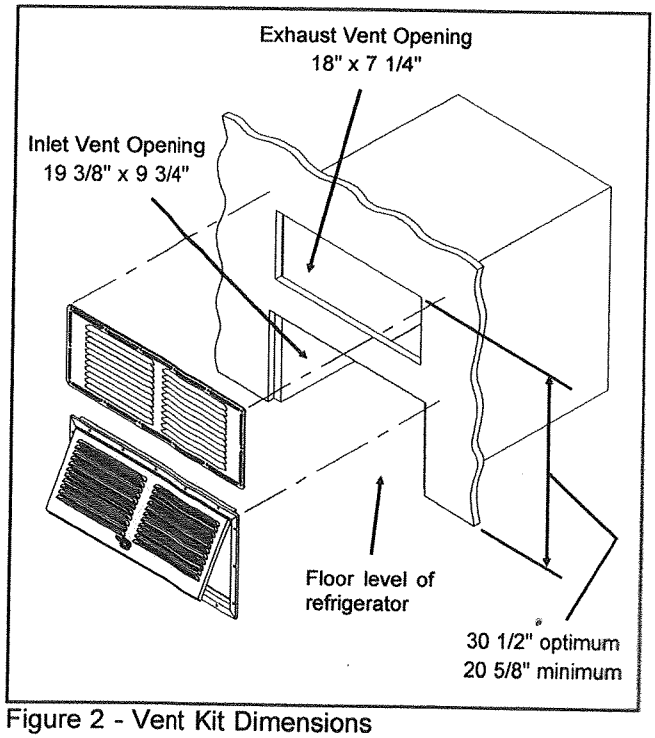

Figure 2 - Vent Kit Dimensions

Installation Instructions

Certification and Code Requirements

The refrigerator described herein is certified under the latest editions of ANSI Z21.19-1990 Standard by the American Gas Association for installation in mobile home or recreational vehicle and approval by the Canadian Gas Association.

Installation must be made in accordance with the following instructions in order for the certifications to be held valid.

United States installations must conform with the latest editions of the following, as applicable:

a. Local codes or, in the absence of local codes, the National Fuel Gas Code, ANSI Z223.1.
b. Manufactured Home Construction and Safety Standard, Title 24 CFR, Part 32-80.
c. Local codes or, in the absence of local codes, the Standard for Recreational Vehicles, ANSI A119.2.

The appliance must not be installed directly on carpeting. Carpeting must be protected by a metal or wood panel beneath the appliance which extends at least the full width and depth of the appliance.

For installations requiring an electric outlet which is energized by an external power source, the refrigerator must be electrically grounded in accordance with the latest edition of the National Electric Code. ANSI/NFPA No. 70.

Canadian Installations must conform with the following, as applicable:

1. Local codes or, in the absence of local codes, the current CAN/CGA B149 1 and 2 Installation Code for Propane Burning Appliances and Equipment.
2. Current CSA Z240.4 Gas Equipped Recreational Vehicles and Mobile Housing or the current CSA Z240.4.2 Installation Requirements for Propane Appliances and Equipment in Recreational Vehicles.
3. Current CSA Z240.6.2/C22.2 No. 148 Electrical Requirements for Recreational Vehicles.
4. When installed, the appliance must be electrically grounded in accordance with the current CANADIAN ELECTRICAL CODE C22.2 PARTS 1 and 2.

Instructions for Reversing Door Swing

The refrigerator is equipped with a convertible door hinge. The hinging of the door can be changed to the opposite side at anytime; however, it is best to change to the desired door swing before installation. If the door swing needs to be changed after installation, the rear mounting screws and gas supply line must be disconnected and the refrigerator pulled away from the cut-out opening.

Tools Required
Phillips Screwdriver - Size #2
One Slotted Screwdriver

REMOVING THE DOOR

Remove the top hinge pin with slotted screwdriver, holding down to insure it will not fall. After hinge pin has been removed, pull door towards you until it clears hinge plate and lift up off of lower hinge pin (See Figure 3). Now remove lower hinge pin with slotted screwdriver.

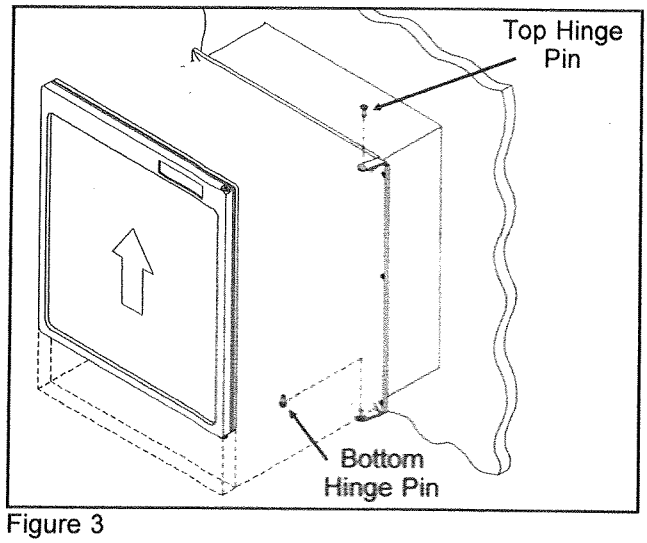

Figure 3

HINGE & BREAKER REMOVAL

Now that the door is removed, gently remove the outer breaker, revealing the mounting screws of the hinge and hinge spacer - Remove these screws along with the hinge and hinge spacer. See Figure 4. All disassembly work is complete, the door can now be switched.

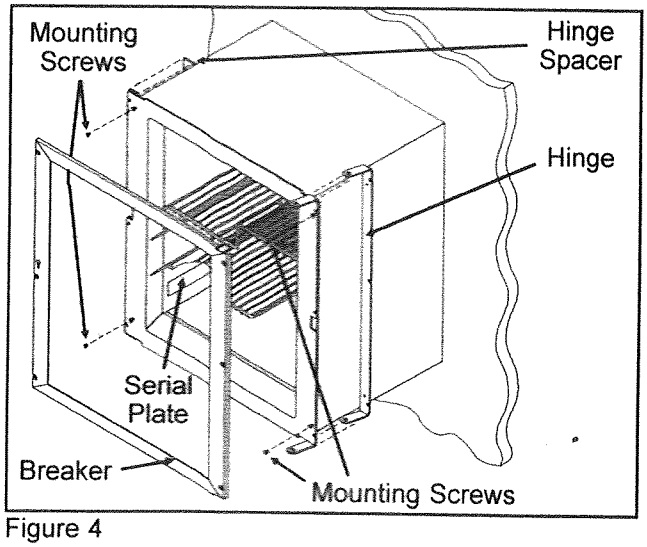

Figure 4

SWITCH OF DOOR SWING

Reverse the position of the hinge and hinge spacer by rotating them 180° and reattach them in their new position, by installing the (4) screws previously removed.

Now rotate the breaker 180° and reposition it on to the refrigerator. Reattach lower hinge pin, line up upper alignment hole and attach upper hinge pin.

FINAL CHECK

Open and close door several times to assure alignment. Check travel latch for proper engagement.

Now that the door is in the desired position, attach the furnished Norcold logo in its upright position.

Securing Refrigerator

IMPORTANT

To insure complete isolation of the living space of the vehicle from refrigerator's combustion system assure the combustion seal is in place and not disturbed. (See Figure 5 below).

A combustion seal (foam strip) is attached to top, bottom, and both sides of the refrigerator' cabinet. This seal isolates the products of combustion from the vehicle's living space and ***must be*** continuous between the vehicle's wall and the refrigerator's cabinet to assure a complete combustion seal.

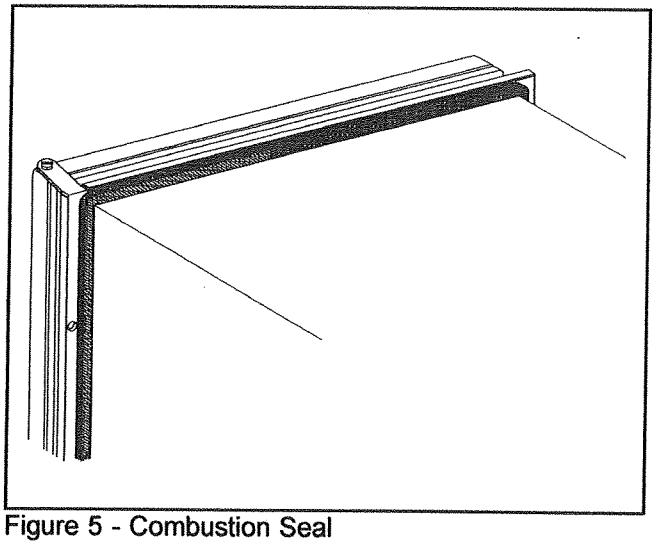

Figure 5 - Combustion Seal

The refrigerator, designed and certified for built-in installation, requires opening dimensions as specified in TABLE 1.

TABLE 1
Refrigerator Cut-Out Opening - inches (mm)

Models	Height	Width	Depth
322, 323	20 $^5/_8$ (524 mm)	17 $^1/_2$ (445 mm)	21 $^1/_4$ (540 mm)

After refrigerator is mounted in place (insuring a combustion seal), the unit can be secured by screws through the mounting flange and hole(s) provided at floor level in the rear (See Figure 6). Caps are provided to cover the mounting flange holes at the front.

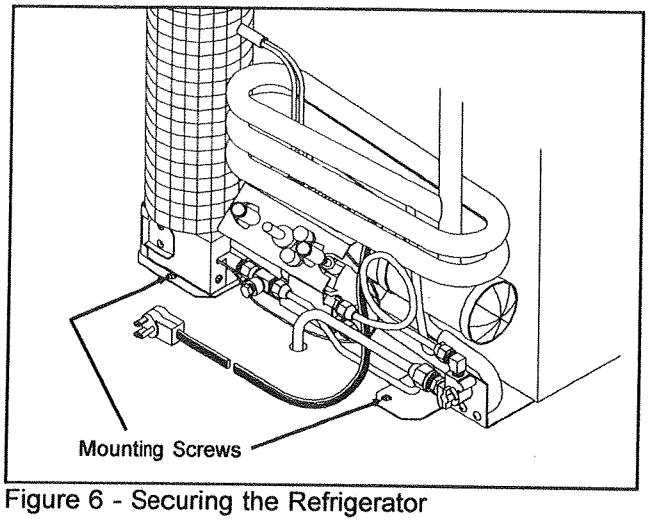

Figure 6 - Securing the Refrigerator

Gas Connection

When connecting the gas supply line to the refrigerator, use tubing and fittings that comply with local, state, or national codes governing size and type. The gas connection fitting is located at the inlet to the Gas Shut-Off valve (See Figure 7) and is a $^3/_8$ SAE (UNF $^5/_8$"-18) male flare connection. Care must be taken when final tightening of the tubing nut is done that the fitting is held securely.

⚠ CAUTION

Use two wrenches when tightening or untightening gas inlet fitting. Failure to use two wrenches could over-stress tubing and create gas leaks.

Access to this fitting is through the lower vent door.

The gas line should be routed in a manner to limit the possibility of vibration or abrasion. It is recommended that the gas supply line enter the combustion chamber through the floor which supports the refrigerator. The hole size through which the gas line enters should be of sufficient size that adequate clearance is maintained. Once the gas line is installed, a rubber type sealant should be applied

around the line at the point it enters the refrigerator area. This will minimize abrasion, vibration, and serve as a barrier from external moisture.

Once the gas line has been connected, All connections must be thoroughly checked for possible leaks with a good leak detection solution. *Do not test for leaks with an open flame.*

⚠ CAUTION

Do not allow leak detection solutions to come into contact with electrical components. Many such liquids are electrically conductive which can cause electrical shorts and in some cases, fires.

If compressed air is used for leak testing, the pressure must not exceed 1/2 psig (14 Inches Water Column).

The appliance and its individual shutoff valve must be disconnected from the gas supply piping system during any pressure testing of that system at test pressures in excess of 1/2 psig (14 inches Water Column).

The appliance must be isolated from the gas supply piping system by closing its individual manual shutoff valve during any pressure testing of the gas supply piping system at test pressures less than or equal to 1/2 psig (14 inches Water Column).

Electrical Connection

120 Volts AC Connection

This refrigerator is equipped with a three prong plug for protection against shock hazard and must be connected into a recognized three prong attachment receptacle (See Figure 7). The free length of cord is 36". The AC receptacle should be located within easy reach without impairing normal servicing. The right side (viewed from rear) is the preferred location, so as to avoid hot burner surfaces. This allows easy accessibility through the vent door. The cord must be routed so as not to come in contact with the burner cover, flue pipe, or any other component that could damage the cord insulation.

⚠ WARNING

Do not remove or cut off grounding prong from ac cord. Absence of proper grounding could cause severe electrical shock or death when touching metal parts of the refrigerator.

12 volts DC is not required during operation in the AC mode.

12 Volts DC Connection (model 323 only)

12 volts DC is required to power the DC heater in the DC mode. The refrigerator receives it's DC power source from the vehicle's 12 volt system; either an auxiliary (house) battery or the engine battery. The battery system not only supplies the refrigerator, but also supplies power to other DC components of the vehicle.

The refrigerator is designed to operate at full cooling capacity in the 12 VDC mode. The DC heating element which supplies power for the cooling unit has a continuous current rating of 11.6 amps @ 12 VDC. The minimum size of wiring to supply this current from the battery is 12 AWG. The negative connection from the battery is connected to the terminal block on the control bracket using a 1/4" quick-connect terminal. The +12 volt connection from the battery is connected to an in-line fuse assembly which is then connected to the terminal block for added safety. The polarities are clearly marked on the terminal block cover.

Hypot Tests

A successful Dielectric Strength test (Hypot test) has been conducted at the factory and the refrigerator does not require an additional test.

Refrigerator Check Out

Check-Out of Flame Failure Safety Device

1. To verify proper operation of the flame failure safety device, first start the system in the gas mode and verify the presence of a steady flame.
2. Turn off the gas at the manual gas input shutoff valve.
3. The flame will go out and within two minutes, the flame failure safety device should automatically close (A sharp click should be heard as this device closes.).
4. Turn the gas back on at the manual gas input shutoff valve.
5. Attempt to relight the burner by pressing the spark ignitor push-button rapidly in succession but without pressing the Gas Control Selector in.
6. Without holding the Gas Control Selector in, the burner flame will not re-light. This indicates the flame failure safety device is functional.

Lighting and Start-Up Instructions

⚠ WARNING

Do not hold gas valve (E) in more than 30 seconds. If flame is not indicated within this time, turn gas to off, wait 2 minutes and retry. Continuing to hold gas valve in will cause gas build-up in the burner area and can result in an explosion which can cause personal injury or death.

Lighting Instructions - Gas Operation

1. Open the lower vent door at the rear of the vehicle to gain access to the rear of the refrigerator. Open window on front side of Burner Box to view the burner shown in Figure 8.
2. Set the Energy Selector Switch (A) to the GAS position.
3. Set the Gas Control Selector (E) to the HIGH COOL position.
4. While pushing the Gas Control Selector switch (E) in, press the spark ignitor push-button (B) in, several times in rapid succession (A click should be heard each time it is depressed.). The burner should light; however, continue to hold the Gas Control Selector (E) in for another 15 seconds before releasing.
5. Verify that the flame remains lit by looking at the burner through the burner box window in Figure 8.
6. Adjust the Gas Control Selector (E) to the desired cooling setting. Close viewing window on Burner Box.

Start-Up Instructions - AC Electric Operation

1. Verify that 120 volts AC is available to the refrigerator and that the AC fuse (D) in the control bracket is operational.
2. Set the Energy Selector Switch (A) to the AC position and verify that the Gas Control Selector (E) is in the OFF position.
3. No other action is required since a fixed thermostat is provided to prevent food freezing in the electric modes.

Start-Up Instructions - DC Electric Operation (3-Way)

1. Verify that 12 volts DC is available to the refrigerator and that the DC fuse (C) in the control bracket is operational.
2. Set the Energy Selector Switch (A) to the DC position and verify that the Gas Control Selector (E) is in the OFF position.
3. No other action is required since a fixed thermostat is provided to prevent food freezing in the electric modes. Operating and User Instructions

Shut-Down Instructions - All Models

1. Set the Gas Control (E) to OFF position.
2. Set the Energy Selector Switch (A) to GAS position.

NOTE: The Gas Control and Energy Selector must be switched to the above positions to completely shut down the refrigerator.

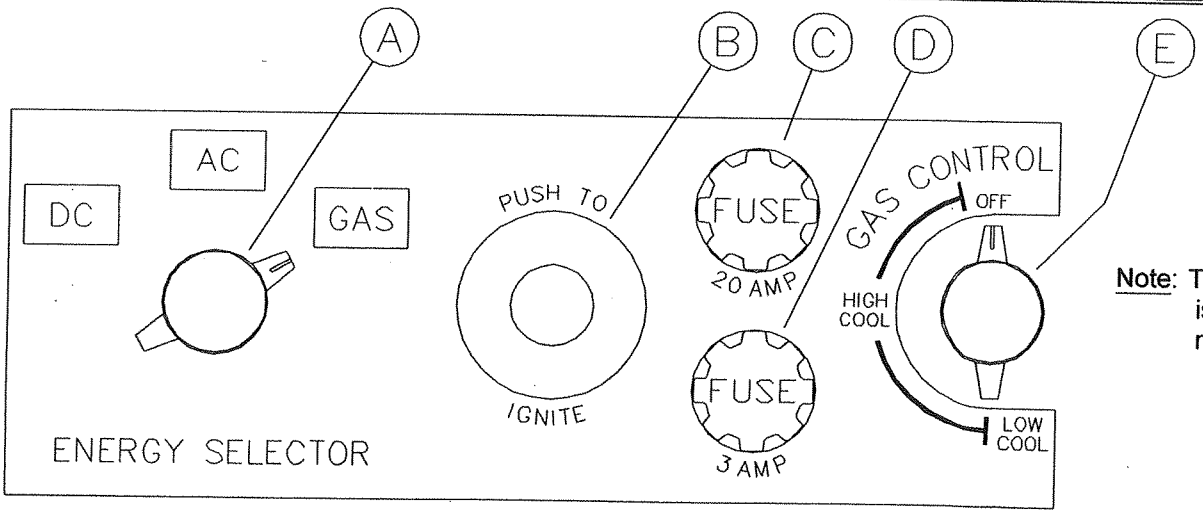

Note: The 20 amp fuse (C) is used on 3-Way models only.

Operating and User Instructions

This appliance has been designed for storage of foods when installed as directed by this manual.

Leveling

Norcold refrigerators do not require critical leveling such as required by other absorption type refrigerators.

Normal vehicle leveling to provide comfort for the occupants is satisfactory for refrigerator operation. This will be well within the operation limits of 3 degrees off level side to side and 6 degrees off-level front to back.

Operation in Transit

While the refrigerator should be level when the vehicle is stopped, performance during transit is not normally affected.

Location of Controls

The controls for the refrigerator are located for easy access from the rear of the vehicle through the lower vent door as illustrated in Figure 7. All control adjustments including energy source selection and cold control adjustments can be made at this location.

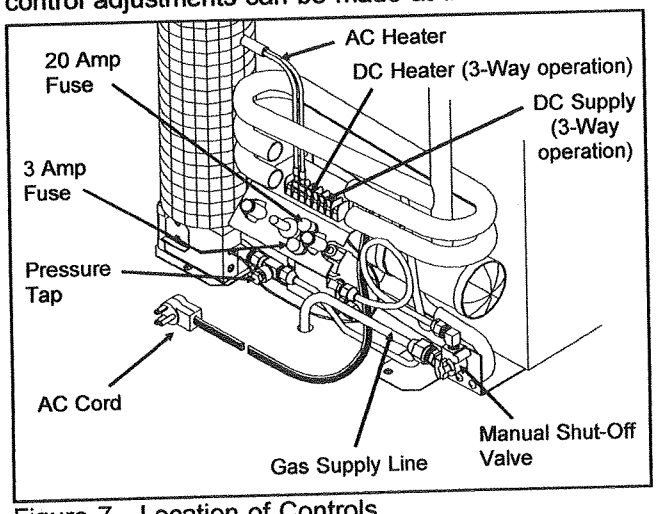

Figure 7 - Location of Controls

Controls

The gas mode utilizes an adjustable Gas Control. The control can be manually adjusted to meter the fixed amount of propane gas to the burner thereby acting as a temperature control to maintain cabinet temperature.

Important: Unlike an automatic gas control, this control does not cycle the flame from high fire to low fire as with other types of RV refrigerators. If the cooling load changes, the Gas Control must be manually adjusted to maintain the same temperature.

When the gas mode is selected, the Gas Control Selector is enabled. It is used not only to light the gas burner but also to adjust the amount of cooling in the gas mode.

Note: Your refrigerator may exhibit a tendency to freeze contents in the gas mode when outside, ambient temperatures fall below 50 degrees Fahrenheit for two or more days. The effects of this can be minimized by setting the refrigerator's gas control to the "Low Cool" setting (refer to illustration at the bottom of page 8 for location of gas control), by keeping your refrigerator cabinet loaded, and by placing foods more likely to freeze on the middle or top shelves. Also note that the electric modes of operation are not affected.

Refer to the start-up and lighting procedures for gas mode operation.

The safety valve is built into the Gas control and is designed so that any loss of flame will stop the gas flow to the burner. It is controlled by means of a thermocouple positioned in the gas flame. As long as a flame is detected by the thermocouple, the valve is held open. Upon flame failure (empty propane tank, blow-out, etc.), the valve closes, shutting off the gas flow. To light, or relight, the Gas Control knob must be pushed and held in while pressing the Spark Ignitor rapidly in succession until a flame is established (See Lighting Instructions).

Electric Modes

The AC mode, and DC mode in the case of the 3-Way model, is thermostatically controlled by a non-adjustable thermostat. The Thermostat has a capillary sensor attached to the cooling fin. The electric heater (AC or DC) will cycle in response to the fin temperature to maintain the cabinet temperature.

Additional Information on Controls

- Be attentive when the outer coach surface is being washed down - particularly when using power sprays, - to avoid wetting electrical controls.

⚠ CAUTION

Never allow water to be sprayed directly on electrical controls located behind the inlet vent door. Electrical damage or fires could result.

Likewise, when using gas leak detecting fluids, avoid wetting the electrical controls.

- Unlike refrigerators with electronic controls, this refrigerator will operate on one energy source completely independently of the others. Gas operation requires no electric hook-up. Likewise, the AC and DC (if so equipped) operations can function independently.

⚠ CAUTION

Attempting to match light the gas burner can be dangerous. Ignition flashbacks could cause burns to the hand or face. If an emergency requires match lighting, do not hold the gas control open more than 5-10 seconds at a time. use a long match.

- Be aware that a temperature selection is only available in the gas mode (Gas Control knob can be set at any position between High Cool and Low Cool).

Refrigerator Care

Owner's Checklist

Your refrigerator is designed for years of trouble free operation if a few simple steps are performed on a regular three to six month basis. Use the checklist below as a guide and a reminder.

1. Keep the food compartment clean. (See section on Cleaning the Refrigerator)
2. Check for frost build-up. (See section on Defrosting)
3. Check for proper draining of the fins in the fresh food compartment.
4. Insure that the food compartment door is sealing properly. (See section on Door Sealing)
5. Be alert to noticeable changes in cooling performance - either overcooling or poor cooling. If this happens without changes in other factors such as weather changes or resetting of thermostat, contact your dealer or Service Center.
6. Insure that your LP gas supply is Propane, not other types such as Butane or Butane mixtures.
7. Check the flame appearance during operation in the GAS mode. (See section on Gas Flame Appearance)
8. Inspect the floor at the rear of refrigerator (Look through intake vent from outside of coach). If water appears frequently, contact your dealer or Service Center.
9. Insure the ventilation space behind the refrigerator (the area from the bottom intake vent, up the back of the refrigerator and to the top exhaust vent) is clear of obstructions (insulation, supports, etc.).
10. Insure that the area directly behind the refrigerator is not being used for storage, particularly for storage of combustible material.

Door Sealing

To maintain cooling efficiency and prevent excessive frost build-up, the doors must seal completely around the entire length of the door gasket. Frequent frost build-up or reduced cooling are indications of air leaks. To check for complete door sealing, lay a long strip of paper (or a dollar bill) across the flange against which the gasket seals; then close the door. A frictional drag should be felt upon withdrawing the paper. Repeat in several places all around the door. If the paper feels loose, the gasket is not sealing. Contact your dealer or Service Center.

Defrosting the Refrigerator

After a period of operation, it is normal for frost to gradually accumulate on the cooling fins, eventually impairing cooling efficiency.

To defrost the refrigerator, set the Gas Control to OFF and the Energy Selector to GAS. Fill trays with hot water, placing them in the food compartment. When all frost has melted, remove the water trays and wipe up the excess moisture with a clean cloth. Replace all food and restart the refrigerator.

Cleaning the Refrigerator

It is important to keep the cabinet clean to minimize the possibility of food odor. The best time to clean the cabinet is after defrosting the refrigerator. Remove the stored food and cleanse interior with lukewarm water to which a dishwater detergent has been added (Dawn works well on stubborn grease spots).

⚠ CAUTION

Never use strong or abrasive type cleaners, chemicals, or scouring pads since they can harm the interior surfaces.

Rinsing with a solution of baking soda and water will freshen the surroundings. Wipe with a soft dry cloth to prevent water spots.

Shutdown and Storage

During periods when the refrigerator is not in use, set Gas Control to OFF and Energy Selector to Gas. Disconnect the power to the refrigerator. The interior should be cleaned and the doors opened to prevent musty smells in the cabinet.

Refrigerator Maintenance

⚠ WARNING

Unauthorized or improper servicing of this refrigerator can cause severe personal injury, property damage or both. Any servicing or maintenance required ***must*** *be performed by a qualified dealer or Norcold authorized service center. For assistance, contact your dealer or a Norcold Service Center.*

Note: The refrigerator information packet supplied with your refrigerator includes a Norcold Service Center location booklet.

Notice: Norcold will not accept responsibility for improper installation, adjustment, alteration, service or maintenance performed by anyone other than a qualified dealer or Norcold Service Center. Resultant costs or related consequential problems will become the owner's responsibility.

Maintenance Checklist

In addition to completing the Checklist items under Refrigerator Care, a safety and performance check is to be made annually by a qualified service facility. The schedule is to include at least the following:

1. Leak test gas supply piping and fittings.
2. Check/adjust gas pressure.
3. Clean burner, burner orifice, and flue tube.
4. Check/adjust the electrode spark gap. Insure the thermocouple tip is clean and secure in the burner bracket.
5. Check combustion seal (visual check without removing the refrigerator) repair or replace if necessary.
6. Keep appliance area clear and free from combustible materials, gasoline, and other flammable vapors and liquids.
7. Inspect the controls, piping, and wiring to insure they are in good condition.

Gas Flame

If the GAS mode of your refrigerator is used (even if only occasionally), a visual check of the burner flame should be made regularly. While operating at maximum cooling and in the GAS mode, open the intake Vent door and remove the Burner Box cover secured with one phillips head screw. Be aware that the cover could be hot.

With the aid of a mirror (dental type mirror is best), observe the flame. The flame should be a sharp blue as indicated in Figure 8 with a stable burning appearance. If there is a constant yellow component observed or if the flame appears erratic and unstable, contact your dealer or Service Center. Also check the position of the flame; it should be centered into the flue tube without touching the inner wall of the tube. If adjustment is required, it must be done by an authorized dealer of Service Center. Be sure to replace the Burner Box cover.

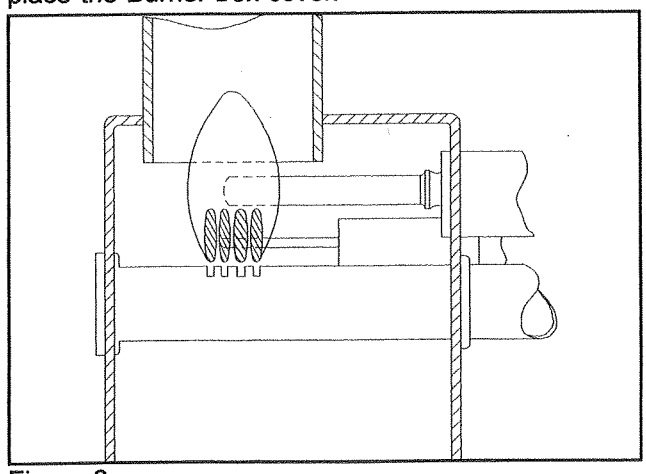

Figure 8

Burner Orifice Removal and Cleaning Procedure

1. Turn off the gas supply at the main tank.
2. Turn refrigerator off.
3. Remove the flare nut from the orifice assembly.
4. Remove the orifice assembly from the burner.

⚠ WARNING

Do not attempt to remove the orifice from the orifice adapter fitting when cleaning. Removing the orifice will cause serious damage to the orifice and it's press-fit seal and may create propane gas leakage. Leaking propane gas, if ignited, could cause an explosion resulting in severe personal injury or death.

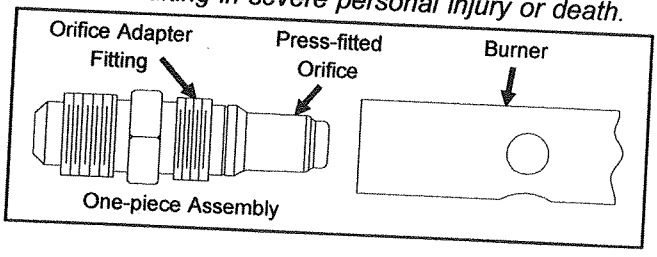

5. Clean the orifice assembly with alcohol and air pressure. Do not clean the orifice with a pin or similar object.
6. Re-install the orifice assembly. Insure orifice is wrench tight in burner.
7. Reconnect flare nut to orifice assembly.
8. Leak test all fittings.

Removing and Replacing the Refrigerator

To remove the refrigerator, disconnect the AC power cord from the wall receptacle and the 12 volt DC from the refrigerators terminal block. Turn off the propane gas at the main supply tank. Disconnect the gas piping at the manual shutoff valve located at the rear of the refrigerator. Remove the screws at the front and rear securing the refrigerator in the enclosure. The refrigerator is now ready for removal. When reinstalling the refrigerator, inspect the area behind the mounting flange for damaged or missing seal strips. These seal strips serve as a combustion seal that prevents exhaust fumes from entering into the living space of the vehicle. After reinstalling, check the gas fitting connections for leaks. *Do not check for leaks with an open flame.*

Failure of Refrigeration

Failure of refrigeration does not necessarily indicate that the cooling system is defective. Other factors governing its operation must be checked.

If the refrigerator has been operating on gas and a loss of cooling is noted, convert the refrigerator to electric operation, AC power (See "Start-Up Instructions - AC Electric Operation"). If the refrigerator has been operating on electric, switch it to gas operation. This will determine if a component failure in the electric or gas controls is causing the cooling fault.

After the refrigerator has been converted from one power source to the other (gas to electric, or electric to gas) allow several hours to assure the unit is cycling properly. At the end of the period the freezer plate should start to cool providing the following items have been checked out thoroughly.

1. The refrigerator is level in each direction.
2. The controls have been properly set for the power source utilized.
3. The power source is at the correct 11 inches water column for gas (main tank supply) and 120 volts AC for electric.
4. The upper and lower vents are not obstructed restricting ventilation.

If no cooling is evident after a reasonable time period, the cause of failure may be due to a blocked system. This blockage is caused when the refrigerator is operated for extended periods in an off-level condition beyond the range of 3 degrees left to right and 6 degrees front to back. This does not mean the system is non-functional, but requires the refrigerator to be removed from the vehicle and placed on its left side for a minimum of one hour. This will allow the ammonia and water to mix with one another which is necessary in the absorption system operation.

Once the system has been relieved of its blockage, operation on AC should once again be initiated for a reasonable time period to determine if the cooling process has been restored. If after this period the freezer plate has no indication of cooling, the refrigerator may have to be replaced. Replacement should be done only by an authorized Norcold Service Center.

Replacement Parts

The following is a list of parts which can be replaced by the owner and are obtainable from all Norcold Service Centers.

Description	Part No.
Door Gasket	61719122
Knob (Energy Selector)	61748822
Knob (Gas Control)	61748722
3 Amp Fuse* (AC)	61654622
20 Amp Fuse* (DC)	61440522
Owners Manual	61750722

* Also available at most auto supply companies. Type 3AG (1 1/4" x 1/4")

Storage Volume

Models	322, 323
Storage Volume	1.7 Cu. Ft.

Information About LP Gas

⚠ WARNING

Use extreme caution when working on or near a propane gas system. Do not smoke or use an open flame near a propane gas system. Leaking propane gas can cause an explosion and result in severe personal injury or death.

Although every precaution is taken by fuel producers, tank manufacturers, and LP gas dealers in keeping moisture out of the fuel, this problem does at times exist causing regulator freeze-ups. Suggestions that you may want to follow to help prevent this moisture are:

1. Always keep the main tank valve closed during periods that the gas will not be used and especially if the tank is empty.
2. Contact your LP dealer about the addition of methyl alcohol into your tank. He may do this for a minimal charge and it will help prevent freeze-up.
   Note: The refrigerator operates on propane, do not use Butane or Butane mixtures.

Basic Practices to Assure Safety

1. Do not allow your tank to be overfilled beyond the legal liquid level capacity indicated by the liquid level stop fill gauge.
2. When closing the POL valve or liquid level on your tank, never use a wrench or pliers. These valves are designed to be closed leak-tight by hand and, if wrenches are necessary to stop a leak, the valve should be replaced.
3. When tightening the left hand thread POL nut on the service valve, draw it up just snug with a proper wrench. Do not over tighten it or jam it. This is a machined brass fitting which seats securely against a female seat in the POL valve and requires no pipe joint compound.
4. When you are ready to use your tank, open the POL valve all the way and then close it one quarter turn. This will assist you in determining if the valve is open or closed.
5. Periodically check the coach tank and line connections for leaks using a soapy solution. In transit vibration may create leaks.

⚠ CAUTION

Do not allow leak detection solutions to come into contact with electrical components. Many such liquids are electrically conductive which can cause electrical shorts and in some cases, fires.

6. Make certain your tank is securely fastened in place.
7. On travel trailer installations having dual tanks, turn the tanks so that the open part of the tank guard is facing the trailer. This will protect the valve and regulator from flying rocks or mud.
8. If you remove your tank for transport to a dealer for refill, transport it in the same position as it is normally used and with the valve closed. Secure the tank against falling or rolling.
9. Above all, practice safety at all times. LP gas can be dangerous. If you have any questions about the operation of your gas appliances of the LP gas system itself, contact your local LP gas dealer.

SERVICE INFORMATION

IF SERVICE OR PARTS ARE REQUIRED, CONTACT THE NEAREST NORCOLD SERVICE CENTER.

A NORCOLD SERVICE CENTER BOOKLET HAS BEEN INCLUDED WITH THE REFRIGERATOR INFORMATION PACKET.

Wiring Diagrams

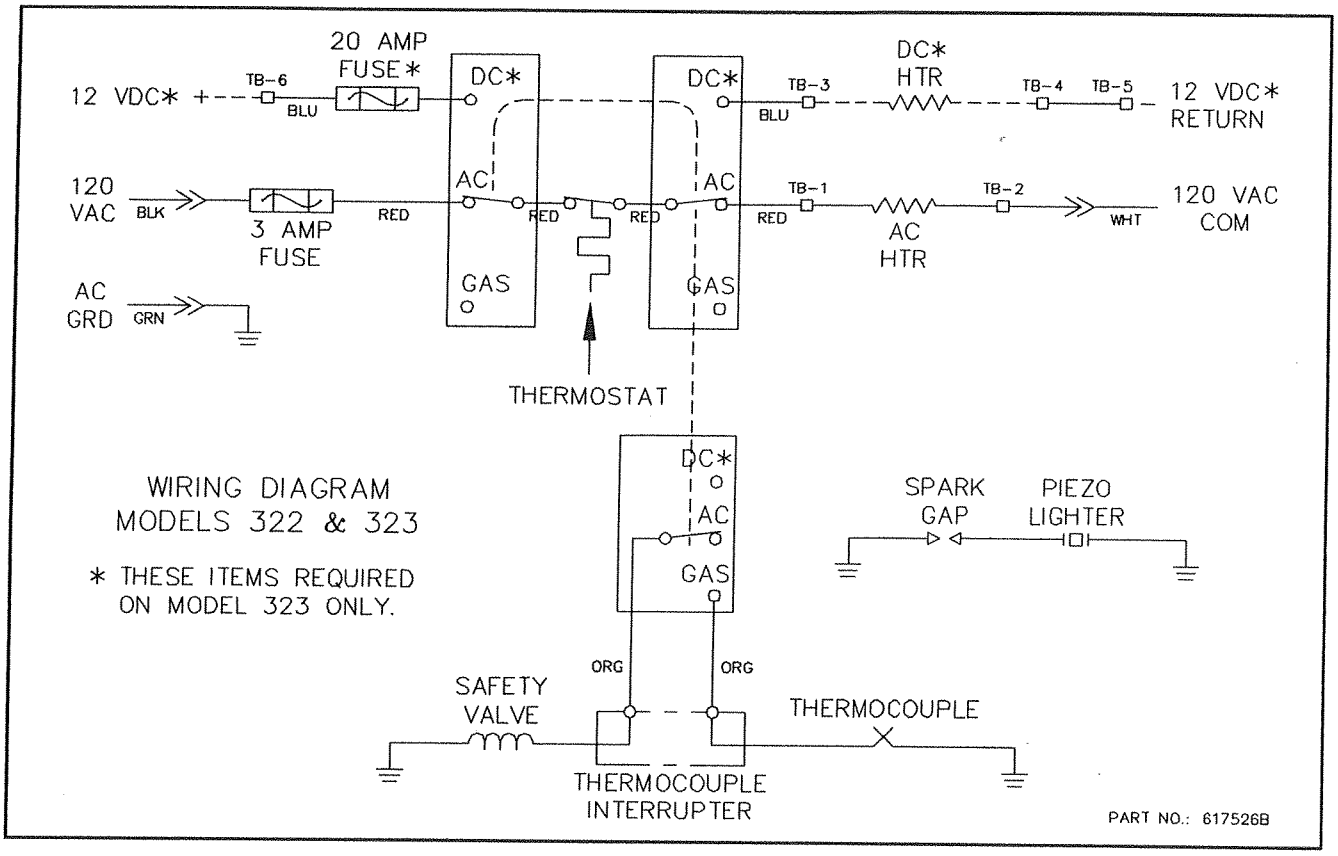

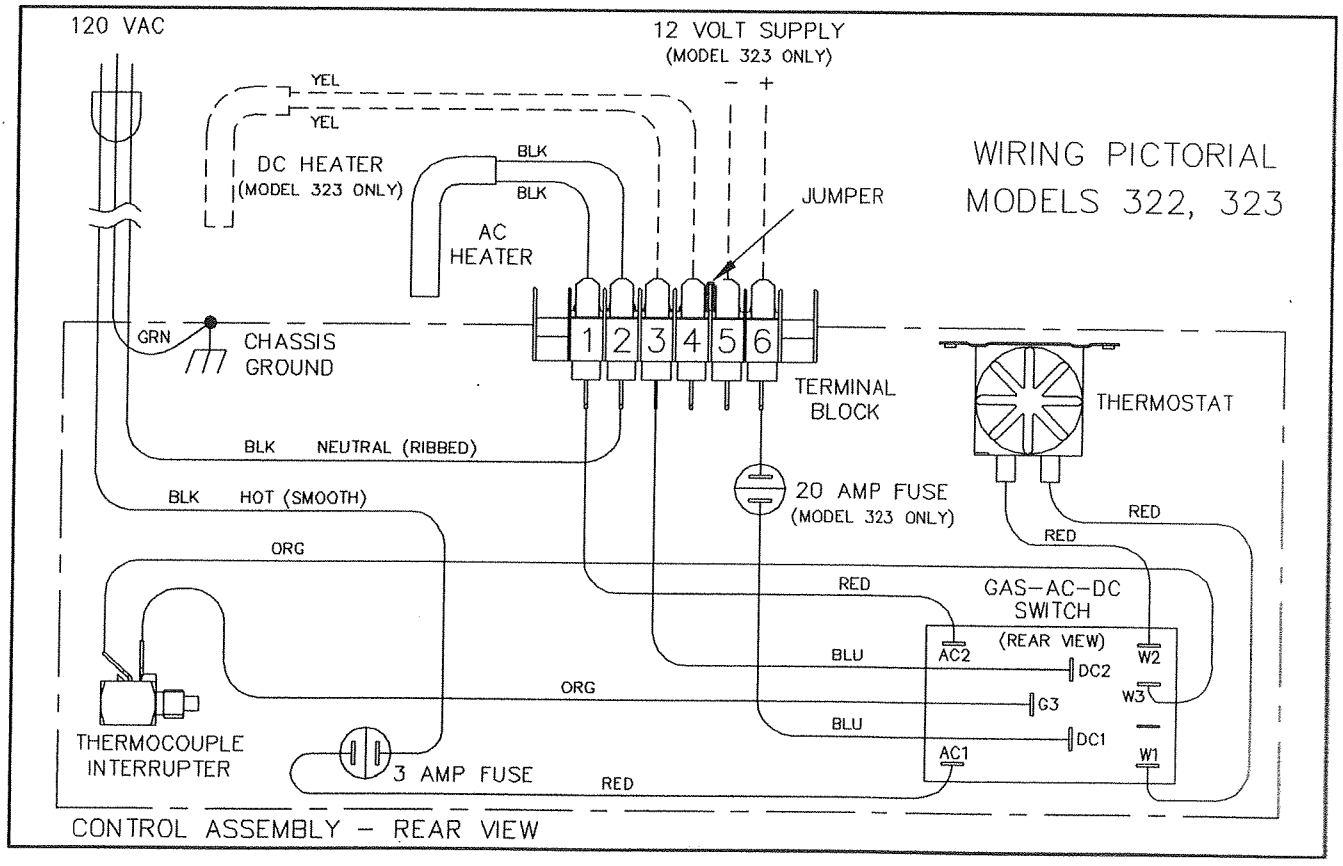

LIMITED WARRANTY
Models 322, 323

NORCOLD
P O BOX 4248
SIDNEY OH 45365-4248

This Limited Warranty is given by NORCOLD, Div. of The Stolle Corporation, ("Company") to the original consumer-purchaser of any new refrigerating equipment ("Equipment") supplied by the Company, excluding glassware, electric light bulbs, replaceable fuses, and will be effective for a period of one year from date of original purchase. The Company warrants, provided that the Equipment shall at all times have been in possession of and used by the original consumer-purchaser, that:

A. The Company will provide free service and replacement of defective parts at no charge at all authorized Norcold Service Centers for a period of one year from the date of original purchase. In the event of a cooling unit failure, Norcold has the option of replacing the cooling unit assembly or the entire refrigerator. If the refrigerator is replaced, Norcold is not responsible for replacing dealer installed options. This Limited Warranty covers labor costs incurred in removing and re-installing the refrigerator only when necessary to replace a defective part. The Company will pay inbound and outbound transportation costs of any defective part, for a 1-year period commencing with date of purchase. The original consumer-purchaser must pay all expenses incurred in making the equipment available at one of the Norcold Service Centers.

B. The following procedure shall be followed by any original consumer-purchaser desiring to obtain performance under the terms of this Limited Warranty. The refrigerator must be brought to any of the Norcold Service Centers and the original consumer-purchaser must present evidence (1) to identify the original consumer-purchaser: and (2) that the item claimed to be defective is still within the warranty coverage. If the original consumer-purchaser is unable to accomplish this task, written notice should be immediately directed to Norcold and advice will be promptly given concerning the manner in which warranty service may be obtained. Inability to physically bring the refrigerator to a Norcold Service Center will not void the warranty, but any additional costs thereby incurred are solely for the account of the original consumer-purchaser.

C. The Company will not be liable under this Limited Warranty for any of the following:
   (1) Defects which arise by reason of transit damage, misuse, neglect or accident.
   (2) Manufacturing defects found at the time of purchase, and associated labor, which are not communicated to the Company within 30 days.
   (3) Labor performed without need for parts replacements which is not communicated to the Company within 30 days.
   (4) Defects in glassware and electric light bulbs or replacement of fuses.
   (5) Defects arising from improper installation or adjustment of the Equipment.
   (6) The need for normal maintenance of this refrigerator according to the guidelines specified in the Installation and Operating Instructions.
   (7) Defects arising from the improper use of parts or parts not manufactured or supplied by the Company in the course of repairs or replacements to the Equipment.

D. Employees and agents of the Company, and its authorized service representatives, have no authority to vary the terms of the Limited Warranty, which applies only to Equipment purchased and installed in the United States of America and the Dominion of Canada. The Company reserves the right to make any improvements or changes in parts or models without notice to any original consumer-purchaser.

E. The Company shall not be liable or in any way responsible for any loss or damage to person or property, or lost profits or other similar loss or damage that may result or be claimed to have resulted from a defect in any parts of the Equipment covered by this Limited Warranty. Some states do not allow the exclusion or limitations of any incidental or consequential damages, so the above limitation or exclusion may not apply to you.

F. ANY IMPLIED WARRANTY OF MERCHANTABILITY OR FITNESS FOR A PARTICULAR PURPOSE;
   (1) APPLICABLE TO A PART OR PARTS OF THE REFRIGERATOR IS LIMITED TO A PERIOD OF ONE YEAR FROM DATE OF PURCHASE.
   (2) SOME STATES DO NOT ALLOW LIMITATIONS ON HOW LONG AN IMPLIED WARRANTY LASTS. THE ABOVE LIMITATIONS MAY NOT APPLY TO YOU.

G. This warranty gives you specific legal rights, and you may also have other rights which vary from state to state.