Coleman® RV Air Conditioners/Faulkner™ Awnings

7300 ROOF TOP AIR CONDITIONER
7300 SERIES CEILING PLENUMS

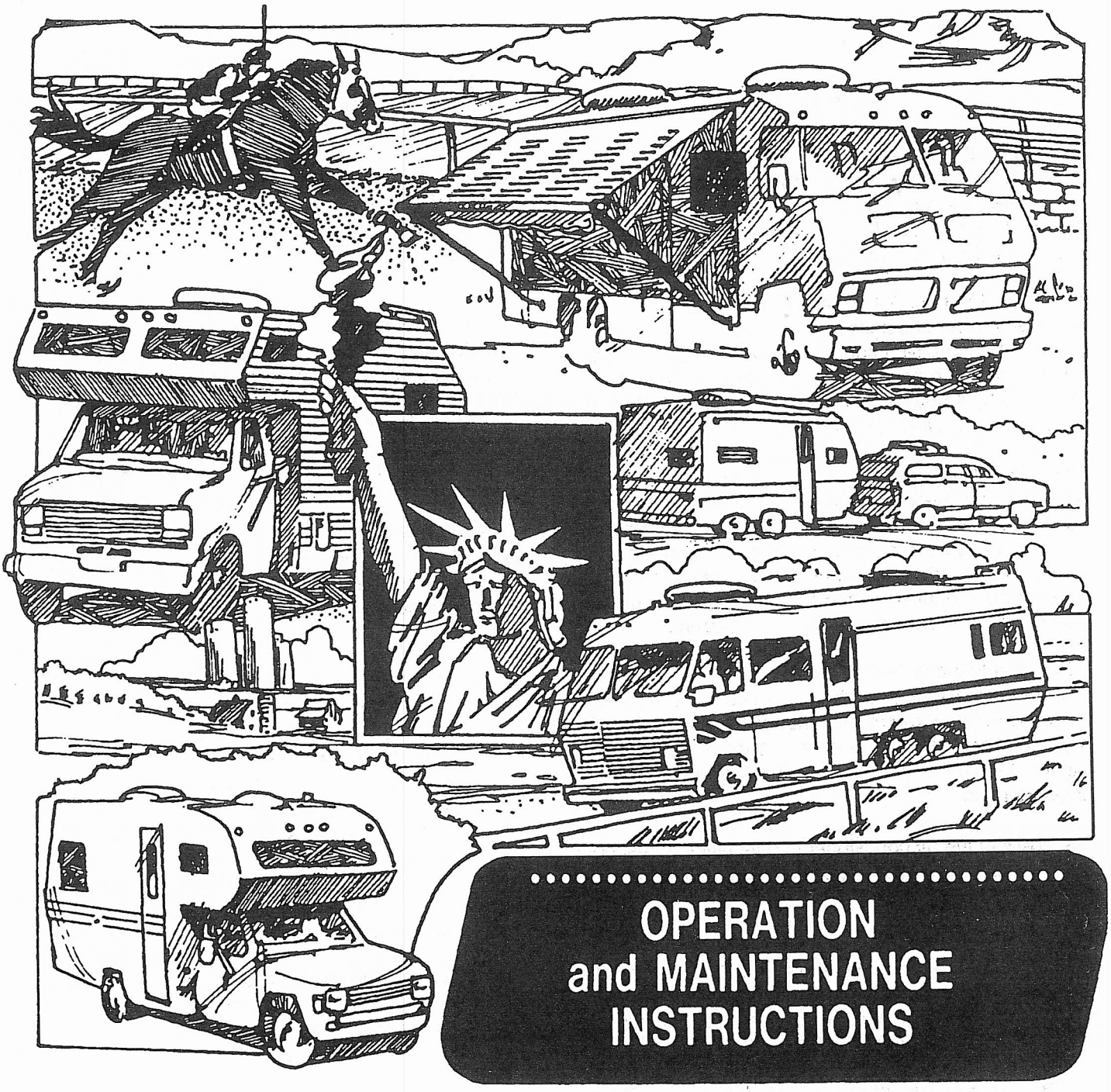

OPERATION and MAINTENANCE INSTRUCTIONS

TABLE OF CONTENTS

SECTION I — GENERAL INFORMATION

NOTE

The optional Elect-A-Heat heating assembly is intended to take the chill out of the indoor air when the air is a few degrees too cool for comfort. The heating assembly is an effective "chill chaser". It is not a substitute for a furnace.

The 7332, 7333 and 7335 Series roof mount air conditioners were designed to operate from a 115 VAC, 60 HZ, 1 Phase power supply. Anytime an air conditioner is not operating properly, the power supply should be examined by a qualified technician to verify that the air conditioner is receiving the proper power supply.

When searching for a qualified technician, please reference your Recreation Vehicle Products Authorized Service Center List. The servicers listed are familiar with your Recreation Vehicle product. If the air conditioner is still under warranty, an authorized servicer must be used for any repair required on the air conditioner. Using an unauthorized servicer may void your warranty.

This is due to the limited electrical power normally available in most trailer parts and/or economic limitations on the use of generators with enough capacity to handle large air conditioners. If more than 1 ton of cooling is desired, then the use of two air conditioners is recommended.

The ability of the air conditioner to maintain the desired inside temperature depends on the heat gain of the recreational vehicle.

The size of the vehicle, amount of window area, amount of insulation, direct exposure to the sun, outside temperature and the number of people in the recreational vehicle may increase the heat gain to such an extent that the capacity of the air conditioner is exceeded.

As a general rule, air entering the air conditioner will be cooled about 15 to 20 degrees, depending on the outside temperature and humidity conditions.

For example, if the air entering the return air grilles in the air conditioner is 80°F, the air leaving the discharge grilles in the air conditioner will be 60° to 65°F.

As long as this temperature difference is being maintained between the return air and discharge air, the air conditioner is operating at its capacity. If the desired inside temperature (normally 80°F) cannot be maintained, then the heat gain of the R.V. is too great for the capacity of the air conditioner.

Parking the vehicle in a shaded area, keeping windows and doors shut and avoiding the use of heat producing appliances in the vehicle will help to reduce the heat gain. When possible, the addition of insulation and tinted glass (especially in uninsulated vans) should be considered.

SECTION II — CONTROL PANEL

If your RV air conditioner is operated from the control panel located in the ceiling assembly, then there are three controls on the ceiling assembly that help you control the air conditioner. They are as follows:

A. The Selector Switch — The selector switch determines which mode of operation the air conditioner will be in. By rotating the selector switch, the operator can obtain any system function desired. System functions vary depending upon options of both the roof top unit and ceiling assembly. Figures 1 and 2 show selector switch location and list all available functions by model.

The "Operation" section explains the operational characteristics of each mode of operation.

B. The thermostat (temperature control) — In the cooling mode, the thermostat regulates the "ON" and "OFF" temperature setting at which the compressor will operate.

For "Heat/Cool" models, the thermostat also controls the "ON" and "OFF" temperature settings of the heater assembly. See Figures 1 and 2.

C. Louvers — The louvers are located at both ends of the ceiling assembly shroud and are used in directing the discharge air from the unit.

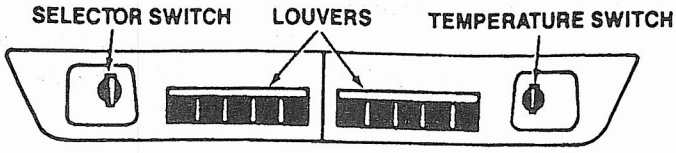

FIGURE 1

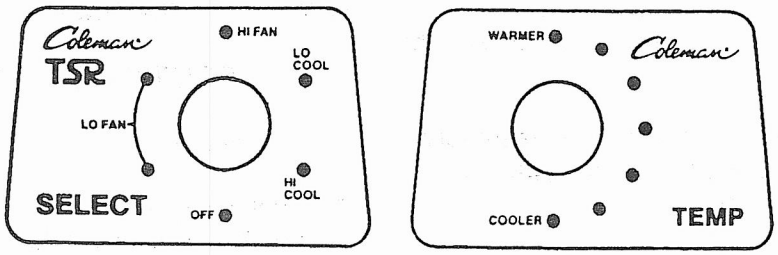

COOLING ONLY MODELS

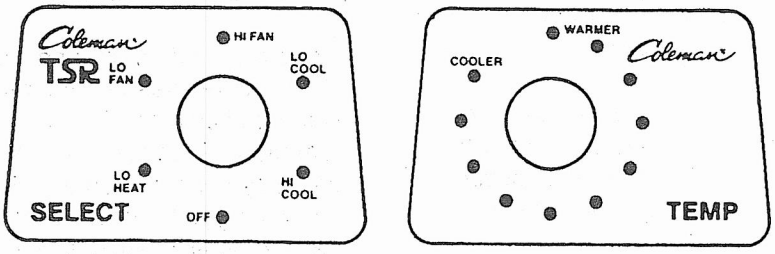

COOLING AND HEATING MODELS
7330 SERIES CEILING ASSEMBLY STICKERS

FIGURE 2

SECTION III — OPERATION

I. For Cooling (refer to Figure 1 and 2, page 3).

A. Turn the selector switch to the "LOW COOL" or "HIGH COOL" position.

B. Rotate the thermostat (temperature control) to the position that is the most comfortable to you. The thermostat will turn the compressor on when the temperature of the air entering the air conditioner rises a few degrees above the setting you have selected. When the temperature of the air entering the air conditioner drops below the selected setting, the thermostat will turn the compressor off. The air conditioner, while in the cooling mode, will continue to cycle the compressor on and off in the above mentioned fashion until the selector switch is turned to another mode of operation.

C. Position the louvers to the desired direction the discharge air is to flow.

II. Operation During Cooler Nights (Cooling Operation)

It is important, when the outdoor temperature drops in the evening or during the night to below 75°F, that the thermostat (temperature control) be set at a midpoint between "Warmer" and "Cooler". If the setting is at "cooler", the cooler (evaporator) coil may become iced-up and stop cooling. During the day when the temperatures have risen above 75°F, reset the thermostat switch to the desired setting.

NOTE

Should icing-up occur, it is necessary to let the cooling (evaporator) coil defrost before normal cooling operation is resumed. During this time, operate the unit in the "HIGH FAN" position with the system at maximum air flow. When increased or full air flow is observed, the cooling coil should be clear of ice.

III. Short Cycling

When an air conditioner is in operation, its compressor circulates refrigerant under high pressure. Once off, it will take two to three minutes for this high pressure to equalize.

The air conditioning compressor is unable to start against high pressure. Therefore, once the air conditioner is turned off, it is important to leave it off for two to three minutes before restarting.

Short cycling the compressor (or starting it before pressures have equalized), will in some instances, kick the circuit breaker or overload.

IV. For Heating ("Elect-A-Heat" ceiling assembly model only) refer to Figure 1 and 2, page 3)

NOTE

The optional Elect-A-Heat heating assembly is intended to take the chill out of the indoor air when the air is a few degrees too cool for comfort. The heating assembly is an effective "chill chaser". It is not a substitute for a furnace.

Do not expect the heating coil on your heater to glow. Because the fan draws in cold air and forces it over the coil, the coil will not turn red. A hint of red may occur where the moving air does not directly touch the coil.

A. Turn the selector switch to the "LOW HEAT" position. At "LOW HEAT", the fan operates on low speed with heat output at maximum.

B. Rotate the thermostat (temperature control) switch to the position that is the most comfortable to you. The thermostat will turn the heater on when the temperature of the air entering the air conditioning unit drops below this setting a few degrees and automatically turns off when the temperature of the air entering the air conditioner rises a few degrees above this setting. The heater will continue to cycle on and off in this fashion until the selector switch is turned to another mode of operation.

C. Position the louvers to the desired direction the discharge air is to flow.

Discharge air temperature can be controlled to some extent by opening or closing the louvers.

When the louvers are closed, the warmest localized discharge air is achieved. Fully opened louvers will throw the warm discharge air to the back and front of the vehicle for more efficient circulation and faster warm-up. Although the air temperature is lower with the louvers fully opened, the heating capacity is still the same.

For Air Circulation Only (refer to Figure 1 & 2, Page 3)

A. Turn the selector switch for "LOW FAN" or for maximum air flow, to "HIGH FAN".

B. Position the louvers to the desired direction the discharge air is to flow.

NOTE

When the selector switch is in the "LOW FAN" or "HIGH FAN" position, the blower motor will operate continuously.

SECTION IV — MAINTENANCE

1. Owner

One of the biggest advantages to your new Recreation Vehicle Products air conditioner is that the maintenance needed to keep the unit in good care is minimal. In fact about the only thing you, the owner, must take care of is the cleaning and replacement of the filters.

Filters are made from long life non-allergenic natural fibers which can be cleaned and reused, and which completely filter the circulated air when the air conditioner is in operation. If the filters are not cleaned at regular intervals, they may become partially clogged with lint, dirt, grease, etc. A clogged filter will produce a loss of air volume and may eventually cause an icing-up of the cooling (evaporator) coil.

IMPORTANT

Do not operate your air conditioner for extended periods of time without the filter installed.

An even more serious condition occurs when the air conditioner is operated without a filter. When this happens the lint, dirt, grease, etc. that are normally stopped by the filter are now accumulating in the cooling coil. This not only leads to a loss of air volume and a possible icing-up of the cooling coil, but could also result in serious damage to the operating components of the air conditioner.

We recommend that the filters be cleaned or changed at least every two weeks when the air conditioner is in operation.

Cleaning and/or changing the filters:

1. Remove the selector switch and thermostat knobs from the ceiling assembly.

2. Remove the two screws that secure the ceiling assembly shroud to the ceiling assembly. See Figure 3.

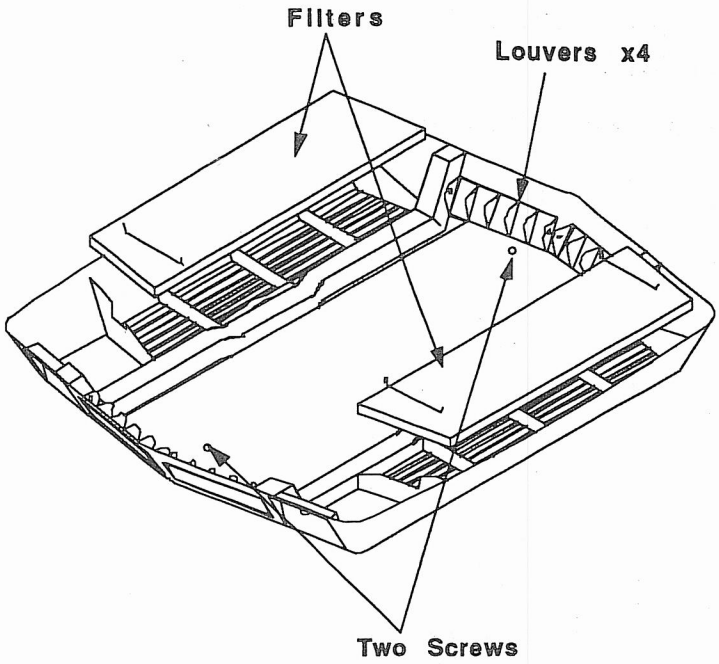

FIGURE 3

3. Lower the shroud and gently slide it off the control knob shafts.

4. Take filters out and either clean or exchange with other filters (See Figure 3).

5. If the vehicle is equipped with a flush mount ceiling assembly, remove the four return air grill screws (See Figure 8, page 12).

6. Remove filter from grill and either clean or exchange with new filter.

NOTE

If replacement filters are necessary, the filters can be purchased from most Recreation Vehicle Products Authorized Service Centers or from Recreation Vehicle Products, Inc. directly. It is recommended that spare filters be carried with the R.V. at all times to replace worn, torn or deteriorated filters.

II. Service Person

A. Electrical - All electrical work and/or inspection should be performed only by qualified service personnel. Contact your nearest Recreation Vehicle Products, Inc. Service Center if electrical problems should arise.

B. Check Points - Failure to start or to cool the air are sometimes problems with air conditioning units. The Recreation Vehicle Products RV air conditioner is designed to operate on 115 volt electrical power. If the compressor on the air conditioner fails to start, check with your Recreation Vehicle Products Service Center to determine that the proper wire size is connected to the unit, the proper circuit breakers are installed as protection devices on the electrical circuit and the proper sized extension cord is being used for the distance covered from the utility outlet to the R.V. The required minimum wire size is #12 AWG for lengths up to 25 feet (larger wire size for greater distances). Each air conditioning unit must be protected with a 20 amp time delay fuse or circuit breaker.

If the air conditioner continues to trip off the circuit breakers, have an electrician check the starting amperage and running amperage on the unit. If the circuit breaker continues to trip off and the electrical consumption is found to be normal, it will require the replacement of the faulty circuit breaker.

If all electrical power to the air conditioner is normal but neither the fan or the compressor will operate, the connector plug located behind the ceiling assembly control box should be checked to determine whether it is faulty.

On the heating-cooling air conditioner models, if all electrical power to the unit is normal and the fan runs but you never get any heated air, then the electrical plug to the heating unit should be checked for a secure connection. If this does not correct the malfunction, the heating thermostat or limit switch may be faulty.

C. Mechanical Integrity - The air conditioner should be inspected periodically to be sure that the bolts which secure the unit to the roof are tight and in good shape. Also, an examination of the plastic shroud covering the air conditioner on the top of the roof should be made periodically. Be sure the four mounting screws and washers are snug and holding the shroud to the air conditioner. Also examine the shroud to be sure it is not developing cracks or has suffered damage from impact.

D. Lubrication

DANGER

DISCONNECT THE POWER SUPPLY TO THE UNIT BEFORE SERVICING TO PREVENT A SHOCK HAZARD OR POSSIBLE INJURY FROM MOVING PARTS.

The blower drive motor on some units may include oiling cups at the top of the motor. There is no requirement to oil the journals under normal operating conditions. However, if lubrication to the unit is desired, use only SAE 20 non-detergent type oil. DO NOT OVER OIL - three to four drops in each oil hole once a year is sufficient.

SECTION V — WALL THERMOSTAT IDENTIFICATION AND OPERATION

Electromechanical Single Stage Heat/Cool Thermostat

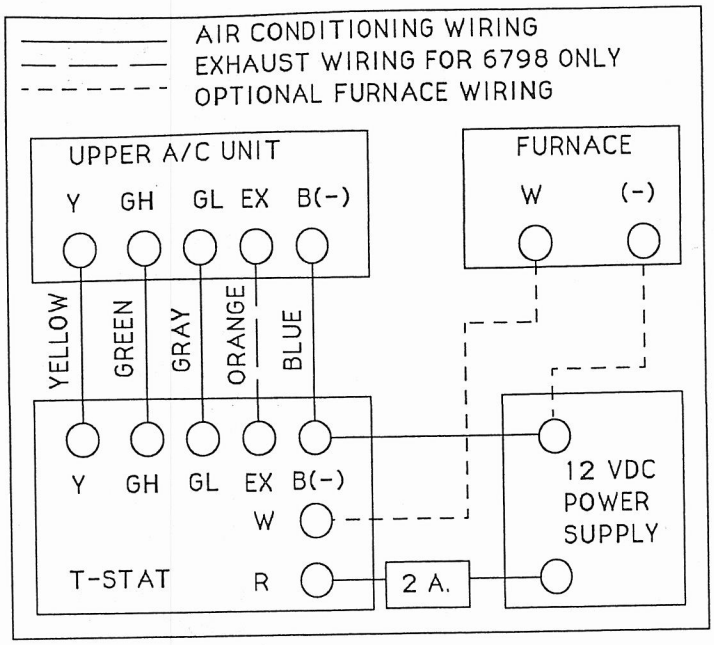

FIGURE 4

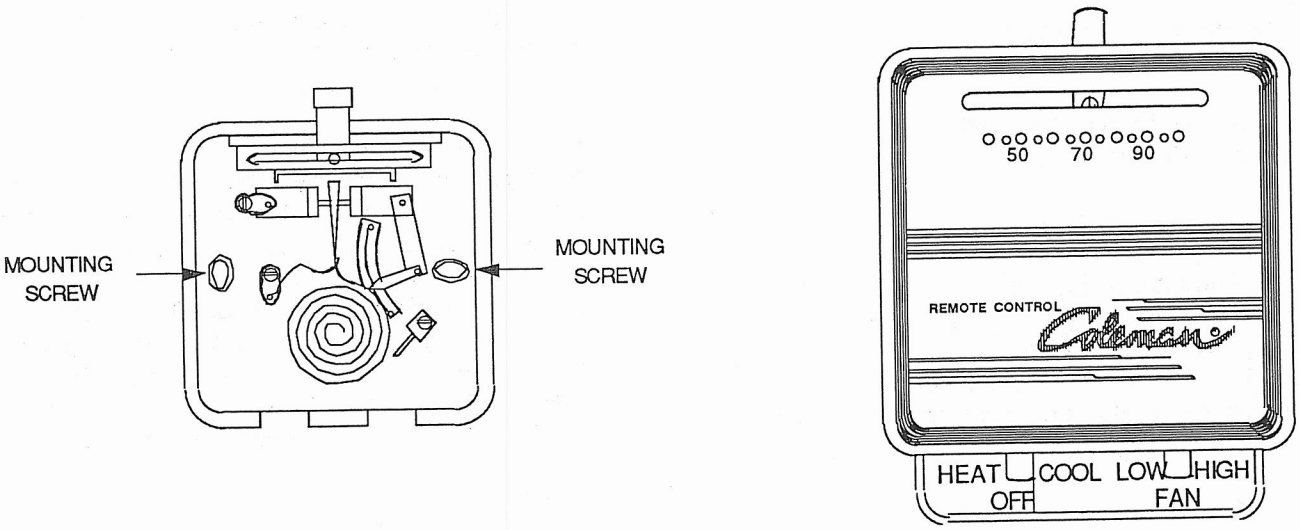

FIGURE 5

Operation - The chart below shows the different system functions capable with these thermostats. After the entire air conditioning system (and furnace system) is installed, check each position function.

If any function of the thermostat fails to operate correctly, check for the optional 2 amp fuse in the red wire of the thermostat.

■ SHOWS POSITION OF SWITCH					OPERATION
SYSTEM			FAN		
HEAT	OFF	COOL	LOW	HIGH	
□	■	□	■	□	With the system switch in the "OFF" position, operation of all components is stopped.
□	■	□	□	■	
□	■	□	□	□	
□	□	■	■	□	Cooling blower operates continuously at low speed. Compressor cycles with thermostat.
□	□	■	□	■	Cooling blower operates continuously at high speed. Compressor cycles with thermostat.
■	□	□	■	□	Fan switch will not operate furnace blower motor. Heating system cycles from thermostat. All air conditioner operation remains off. Furnace blower motor operates independently of thermostat from within the furnace.
■	□	□	□	■	

ELECTRONIC SINGLE STAGE HEAT/COOL THERMOSTAT

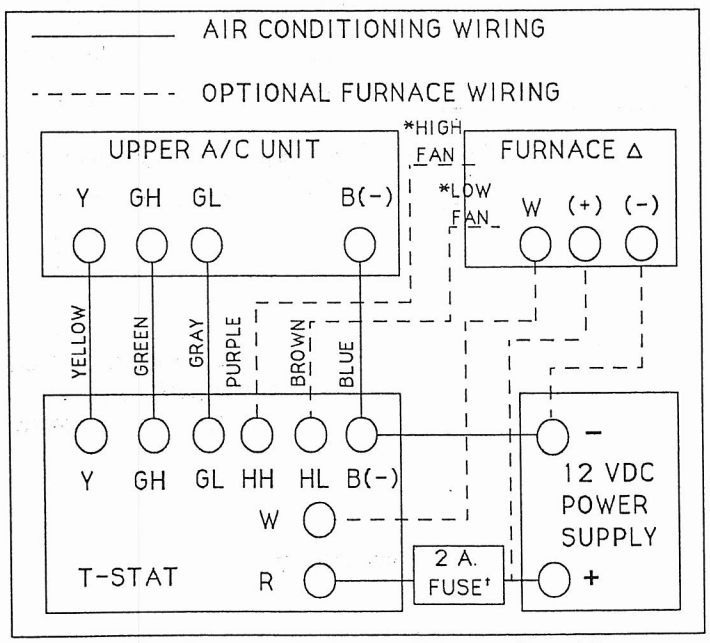

* Optional For Furnaces Equipped With Two Speed Fan

† Suggested Fuse To Protect Wiring Leading To Thermostat

Δ Not Found In "Cool Only" Applications

FIGURE 6

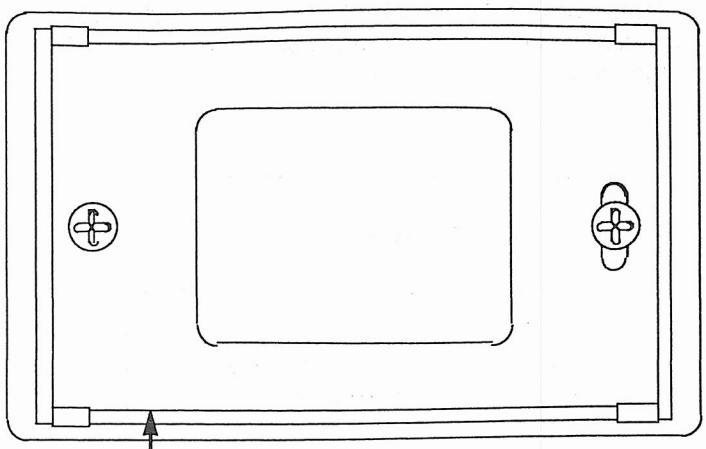

Sub-Base

Heat/Cool Thermostat Shown

"Cool Only" Model Has No Reference To Heat On Face Of Thermostat

Thermostat Body

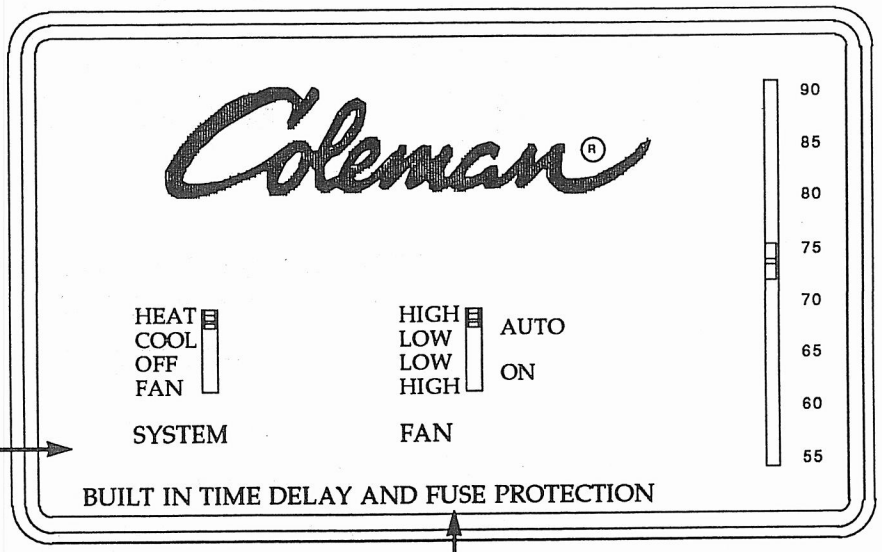

This thermostat is equipped with a replaceable 2 amp fuse located on the back of the thermostat body.

FIGURE 7

OPERATION

The chart below shows the system functions with the "Heat/Cool" thermostat. After the entire air conditioning system (and furnace system) is installed, check each position function. Disregard references to heat functions when using the "Cool Only" thermostat.

■ SHOWS POSITION OF SWITCH								OPERATION
SYSTEM				FAN				
* HEAT	COOL	OFF	FAN	AUTO HI	AUTO LO	ON LO	ON HI	
□	□	■	□	~~□~~	~~□~~	~~□~~	~~□~~	No functions occur.
□	□	□	■	~~□~~	~~□~~	~~□~~	~~□~~	Air conditioner fan runs at high speed continuously regardless of fan switch setting or setpoint. No other functions occur.
□	■	□	□	■	□	□	□	Air conditioner compressor, high speed fan and furnace high speed (if so equipped and wired), cycle to satisfy setpoint.
□	■	□	□	□	■	□	□	Air conditioner compressor, low speed fan and furnace low speed (if so equipped and wired), cycle to satisfy setpoint.
□	■	□	□	□	□	■	□	Air conditioner compressor cycles to satisfy setpoint. Air conditioner low speed fan and furnace low speed fan (if so equipped and wired) run continuously.
□	■	□	□	□	□	□	■	Air conditioner compressor cycles to satisfy setpoint. Air conditioner high speed fan and furnace high speed fan (if so equipped and wired) run continuously.
■ *	□	□	□	■	□	□	□	Furnace and furnace high speed blower cycle to satisfy setpoint. Furnace blower operates from sequencer or time delay in furnace. During furnace operation, furnace overides and forces fan to high speed. Air conditioning fan does not run.
■ *	□	□	□	□	■	□	□	
■ *	□	□	□	□	□	■	□	Furnace blower runs continuously at low speed (if so equipped and wired) until furnace cycles on to satisfy setpoint. Furnace overides and forces fan to high speed during furnace operation. Air conditioning fan does not run.
■ *	□	□	□	□	□	□	■	Furnace blower runs continuously at high speed (if so equipped and wired). Furnace cycles to satisfy setpoint.

Furnace fan operation is available only if provided by the furnace manufacturer. The purpose of furnace fan operation simultaneously with cooling fan is to better circulate air within the conditioned space for a more uniform space temperature.

All cooling functions controlling to setpoint have a short cycle protection time delay of 3 minutes. There will be no delay if the cycle **OFF** time exceeds 3 minutes.

* There is no heat switch or furnace function available with the "Cool Only" thermostat.

LCD ELECTRONIC SINGLE STAGE HEATING/TWO STAGE COOLING THERMOSTAT

APPLICATION

NOTE: When unit is first turned on, the display is delayed for approximately 1 minute while the circuits initialize.

This thermostat is designed to operate 12 VDC controlled heating and air conditioning systems. It can control one stage of heating and two stages of cooling. It is a manual changeover type of thermostat between heating and cooling. It also incorporates time delay circuitry in the cooling mode to protect cooling system components.

The time delays amount to 3.5 minutes between off and on cycles. There is thirty second delay and two degrees separation between the cooling stages to ensure comfort control and maximize system efficiencies.

The thermostat has two minutes of back-up power to keep the digital circuitry energized while transfering power between land-line and on-board generator. Once back-up power has been depleted, the thermostat goes into default. When in default, the thermostat automatically resets both the heating and cooling setpoints. The thermostat default temperatures are 68°F for heating and 78°F for cooling (The thermostat resets to default temperatures when the system switch is placed in "OFF" and back-up power is depleted or power to the thermostat has been disconnected and back-up power is depleted).

Operating temperatures for both heating and cooling systems are changeable to suit the comfort needs of the occupants. Instructions for setting operating temperatures are covered under "ADJUSTING SETPOINT".

IDENTIFICATION

This thermostat has two slide switches (for system selection and cooling fan), three momentary switches and a liquid crystal display.

1. The **SYSTEM** switch has four positions to control the operation of the heating and air conditioning systems.

   COOL - The display will indicate room temperature and the air conditioner will operate from the setpoint temperature.

   HEAT - The display will indicate room temperature and the heating system will operate from the setpoint temperature.

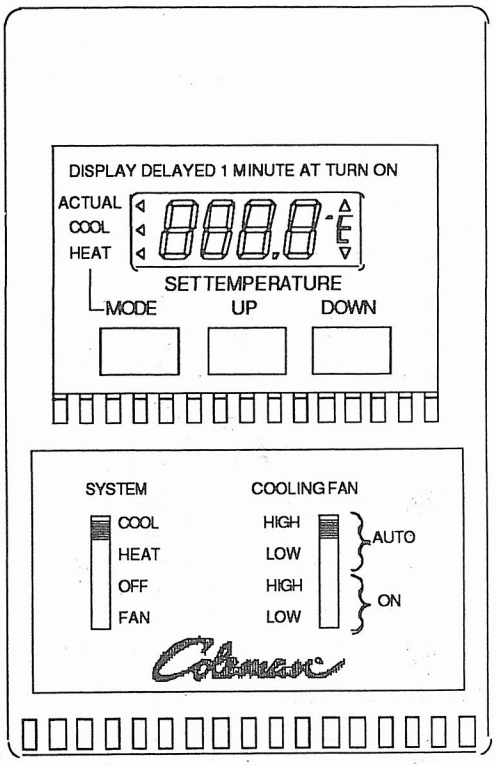

OFF - The display will indicate room temperature until back-up power to memory is depleted (approximately 2 minutes). Once back-up is depleted, the display will be blank. No thermostat operation will occur.

FAN - The display will indicate room temperature and the cooling fan will operate continuously on high speed.

2. The **COOLING FAN** switch has four positions to control operation of the cooling fan while in the COOL selection.

   HIGH AUTO - Cooling fan operates at high speed and cycles on and off with the compressor, with a 30 second delay between Cooling Fan and compressor.

   LOW AUTO - Cooling fan operates at low speed and cycles on and off with the compressor, with a 30 second delay between Cooling Fan and compressor.

   HIGH ON - Cooling fan operates continuously at high speed. Compressor cycles as needed.

   LOW ON - Cooling fan operates continuously at low speed. Compressor cycles as needed.

3. The liquid crystal display shows the user both the mode of the thermostat (by the arrow at the left side of the display) and the temperature for that mode.

The modes are: **ACTUAL, COOL SET** and **HEAT SET.**

When the thermostat is in **ACTUAL**, the display is indicating current room temperature. Operation is determined by the system switch position and the thermostat will control the heating or cooling system from the setpoint temperature.

When the thermostat is in **COOL SET**, the display is indicating the current cooling system setpoint temperature. The setpoint may be adjusted up or down to meet individual comfort needs.

When the thermostat is in **HEAT SET**, the display is indicating the current heating system setpoint temperature. The setpoint may be adjusted up or down to meet individual comfort needs.

4. The three Momentary switches are as follows:

MODE - This momentary button advances the thermostat into the temperature setting mode for COOLING, HEATING and back to ACTUAL.

UP ARROW - This momentary button increases the temperature setpoint.

DOWN ARROW - This momentary button decreases the temperature setpoint.

ADJUSTING SETPOINT

To adjust the setpoint of either heating or cooling, press the MODE button until the arrow on the left side of the display indicates the desired setpoint to be changed; either COOL SET OR HEAT SET. The display will indicate the current setpoint of the thermostat. Press the UP arrow or the DOWN arrow button to change the setpoint. Once the new desired setpoint is displayed, press the MODE button until the arrow is pointing to ACTUAL. If the thermostat is left in the COOL SET or HEAT SET modes, the display will return to ACTUAL in approximately two minutes.

After the display has been returned to ACTUAL, it takes 90 seconds for the thermostat to recognize the changes made to the setpoints.

TESTING

Place the thermostat system switch into the OFF position. Once all safety precautions have been met, reinstate power to all systems; thermostat, cooling and heating.

OFF

Starting with the system switch in the OFF position, the display will be blank and no part of either the cooling or heating systems will be operating.

FAN

Move the system switch to FAN. The display indicates room temperature after two minutes. The cooling system fan operates continuously at high speed. No other components or systems are operating.

HEATING

Move the system switch to HEAT. The display will indicate room temperature. Adjust the Heat Set setpoint of the thermostat above the room temperature displayed and return the arrow to the ACTUAL position. After 1 minute, the heat circuit of the thermostat will activate the heating controls. Once the heat has turned on and is running, adjust the HEAT SET setpoint below the room temperature displayed and return the arrow to the ACTUAL position. After 1 minute, the heat circuit of the thermostat will turn off and deactivate the heating controls.

COOLING

Move the system switch to COOL, the display will indicate room temperature. Adjust the COOL SET setpoint 3-5 degrees above room temperature and return to actual. Move the fan switch to LOW ON, the fan operates continuously at low speed. Move the fan switch to HIGH ON, the fan operates continuously at high speed. Move the fan switch to HIGH AUTO, the fan will remain off. Adjust the COOL SET setpoint 5 degrees below room temperature and return to actual.

The Cooling Fan will come on in approximately 1 minute, then 30 seconds later 1st stage cooling will come on. Second stage cooling will come on approximately 30 seconds after 1st stage. With the fan switch in HIGH AUTO, the fan will operate at high speed and cycle with Stage 1 compressor. Move the fan switch to LOW AUTO, the fan will operate at low speed and cycle with Stage 1 compressor. Once both stages of cooling and both fan speeds have been verified, adjust COOL SET setpoint 1 degree below room temperature and return to ACTUAL. After approximately 90 seconds, second stage cooling will turn off while first stage remains on. Adjust COOL SET setpoint to a temperature above room temperature and return to actual. After approximately 3 to 3.5 minutes, both first stage cooling and the cooling fan will cycle off. First stage cooling cannot be restarted until a 3 to 3.5 minute time delay has occurred.

SECTION VI — WARRANTY SERVICE

Let's face it. Sometimes even the best products may need service. If that's true of your R.V. Products air conditioner, you can get service on your unit at most of the firms listed in the Authorized Service Center List included with your product. If you fail to receive your Service Center List or you need to obtain qualified factory trained service, contact us at the following address:

Recreation Vehicle Products, Inc.
P.O. Box 4020
Wichita, KS 67204
1-800-227-5693

IMPORTANT

1. Carefully read your limited one year product warranty which is packed with the product.

2. An optional limited four year parts contract on the compressor ONLY is available at an additional cost of $39.95. To obtain this optional four year parts contract, fill out the application included in this book and send it with a check or money order to:

   Recreation Vehicle Products, Inc.
   Customer Service Dept. 546
   P.O. Box 4020
   Wichita, KS 67204

   The optional four year parts contract begins upon the expiration of the initial warranty. **Before applying, carefully read the parts contract reproduced on the back page of this manual.**

3. Any applications for the extended compressor parts contract must be made **within 90 days** from the purchase date of the air conditioner or the recreational vehicle if the air conditioner is original equipment.

4. Inquiries to your R.V. Products Representative or Recreation Vehicle Products, Inc. on this unit must include the units **model and serial number.** The model number and serial number can be found on the I.D. Label located at the bottom of the roof unit, see Figure 9. Access to this label is accomplished by lowering the ceiling assembly. The rating plate can be read without requiring the removal of any parts, see Figure 9. **Use only the roof unit model and serial numbers when sending in the optional four year parts contract.**

5. Inquiries on the Ceiling Assembly should contain the ceiling assembly part, serial or code date number. This information can be found on the I.D. Label, see Figure 9.

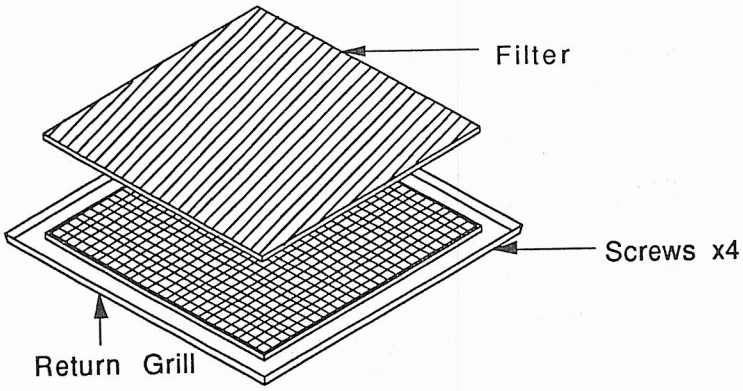

FIGURE 8

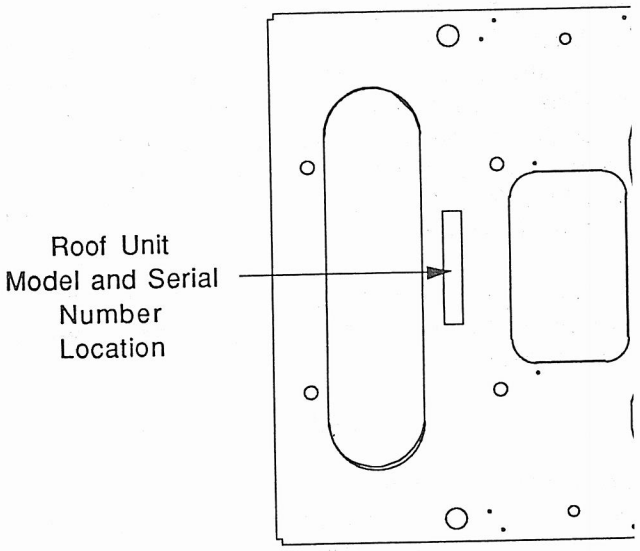

FIGURE 9