71957-00001.D

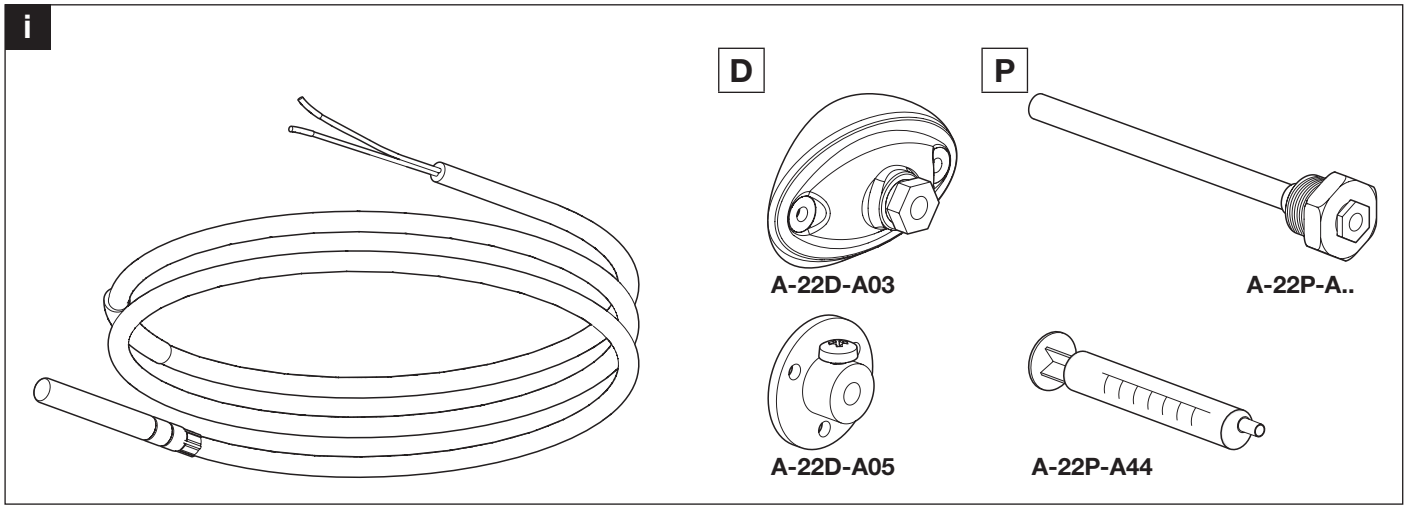

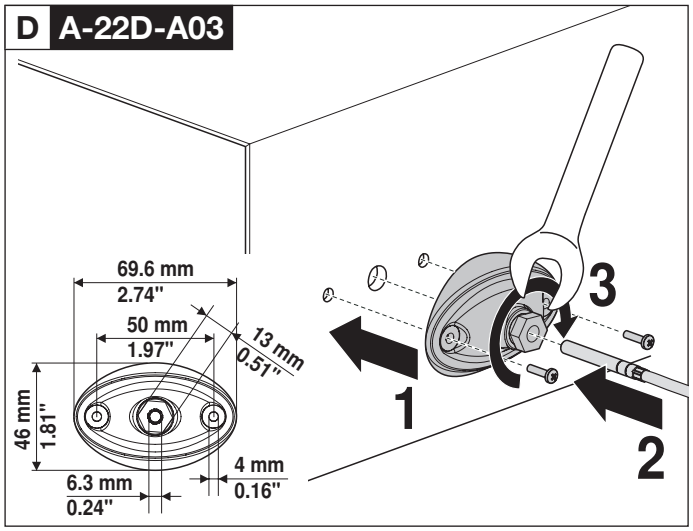

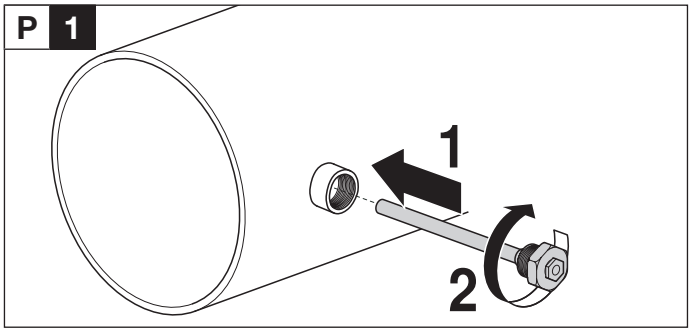

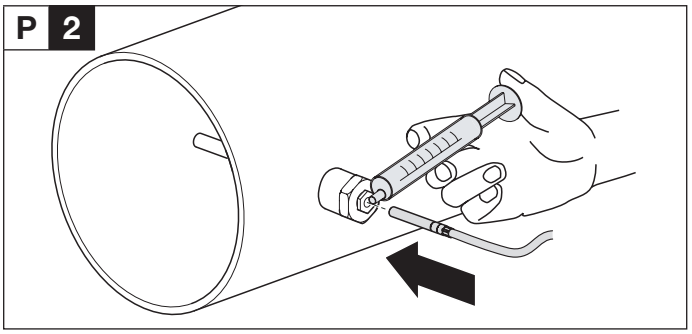

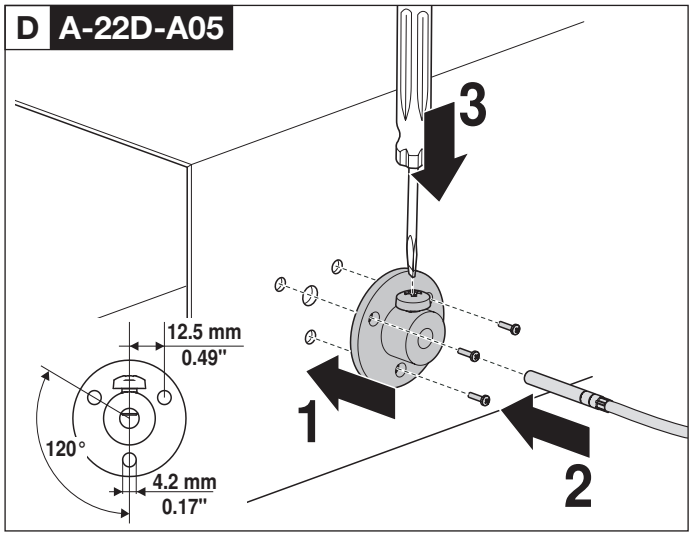

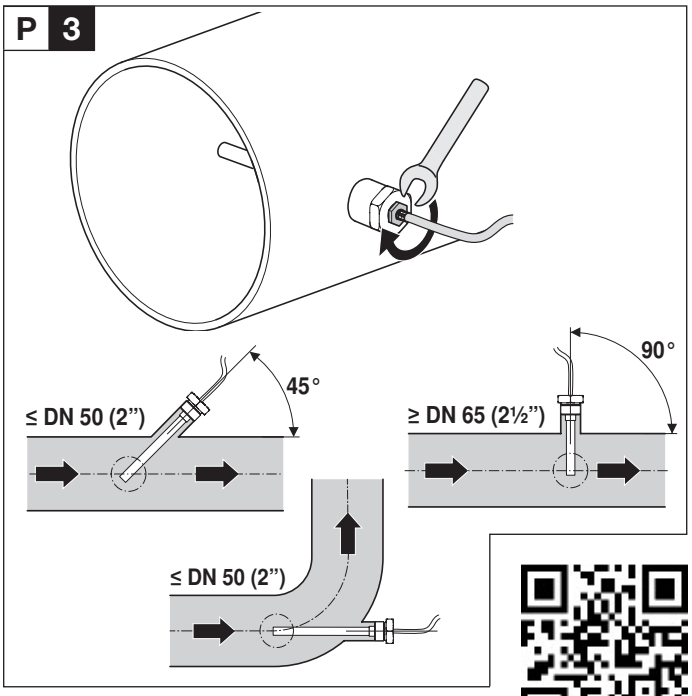

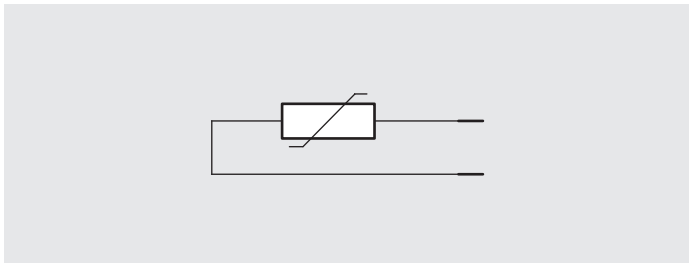

www.belimo.com/safety