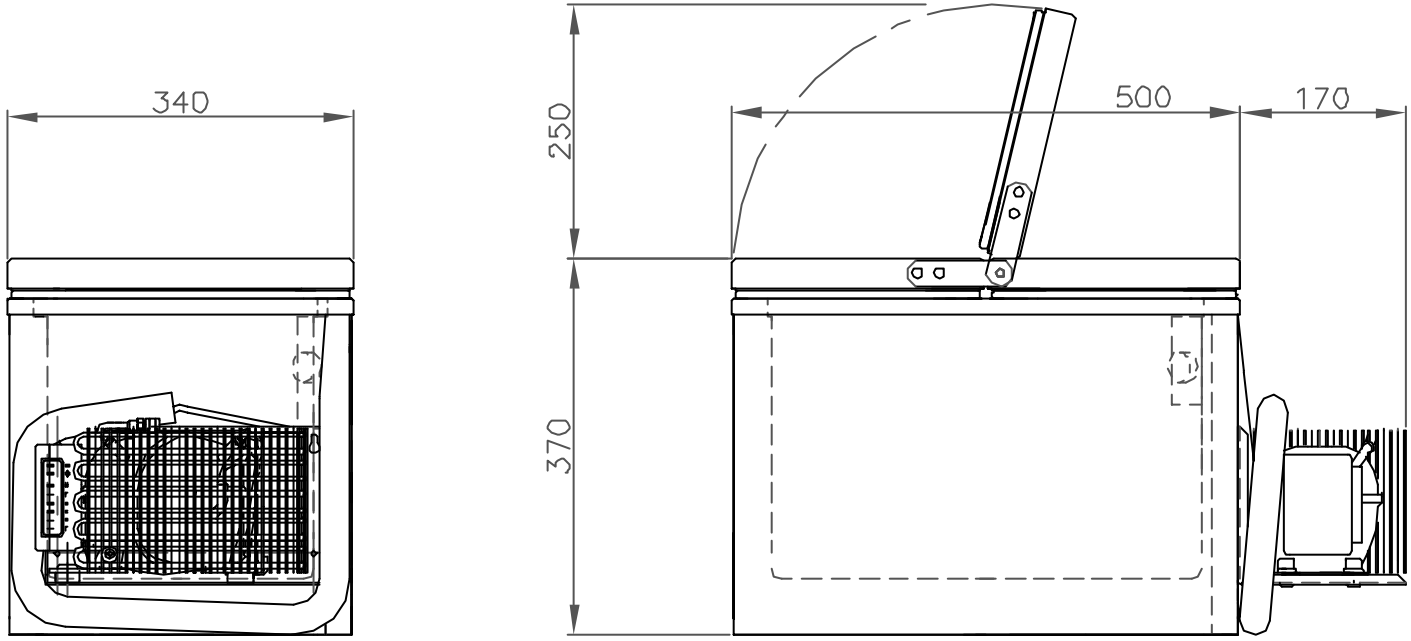

RevNo	Revision note	Date	Signature	Checked

Item ref	Quantity	Title/Name, designation, material, dimension etc			Article No./Reference
Designed by		Checked by	Approved by - date	Filename	Date 040929/LLG	Scale
Owner isotherm by indel marine				Title/Name Isotherm BI29	
				Drawing number BI29	Edition	Sheet