ANCHOR CADDIE

Original

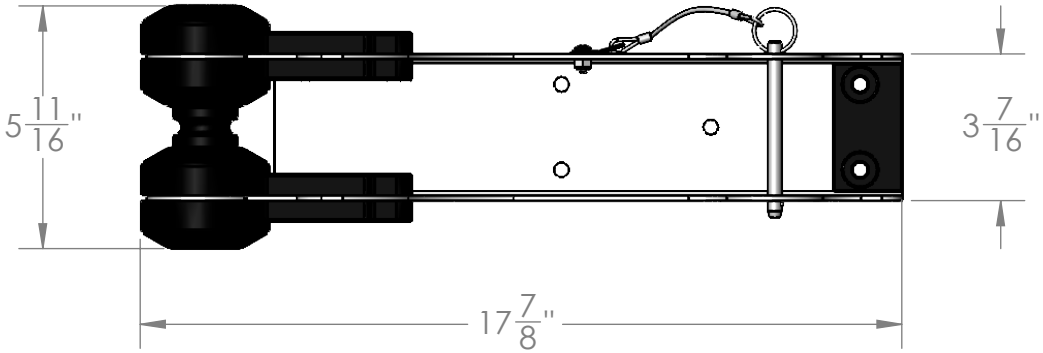

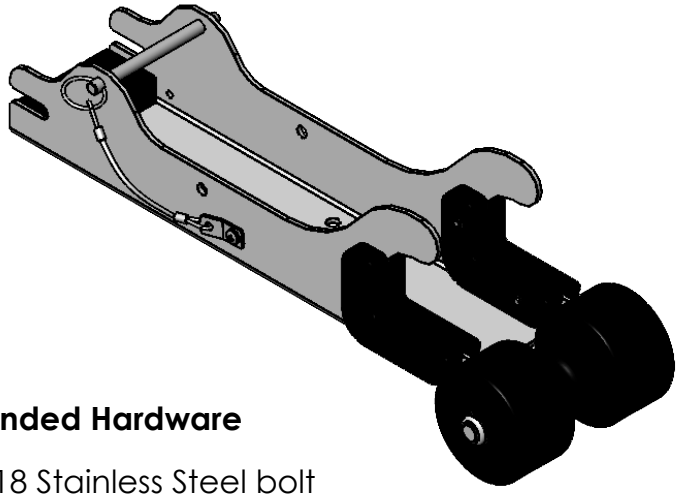

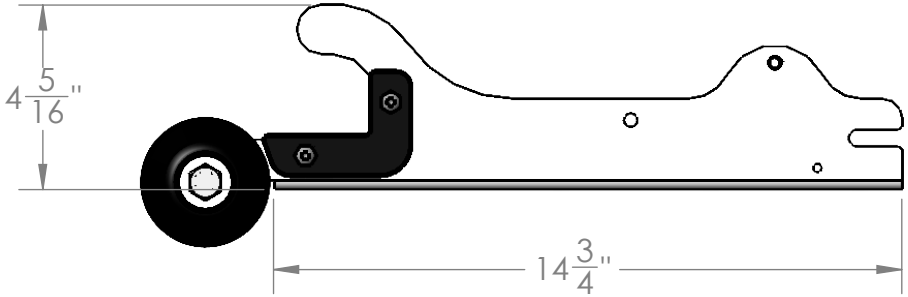

Recommended Hardware
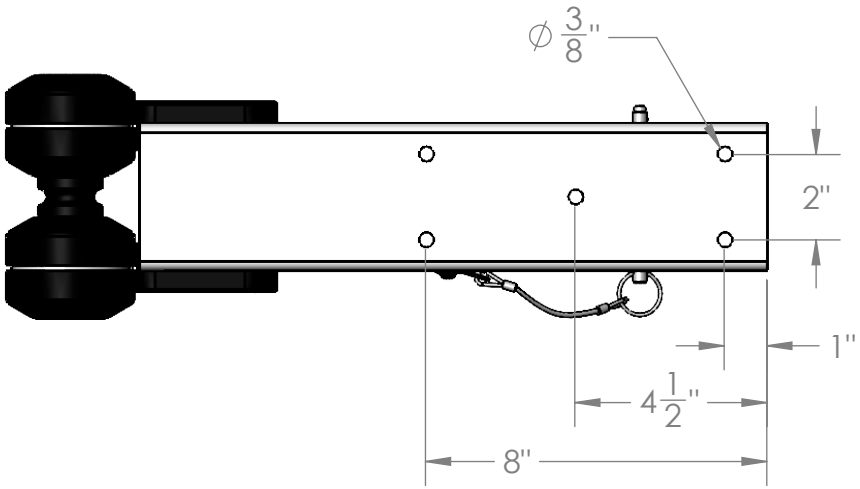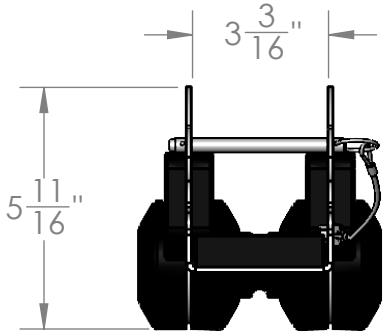
- 5/16-18 Stainless Steel bolt
- 5/16-18 Stainless Steel locknut
- 5/16 Stainless Steel fender washer