Sermoon D1

New Arrival
New Innovation

Transparent and elegant
3D printer

- Transparent appearance
- Ultra-high stability
- Variable voltage power supply

Indulge Yourself with 3D Printer

Modular structure to experience the enclosed machine. Hand-assembled to get a safe and stable enclosed printer. Enjoy the DIY fun

DIY +

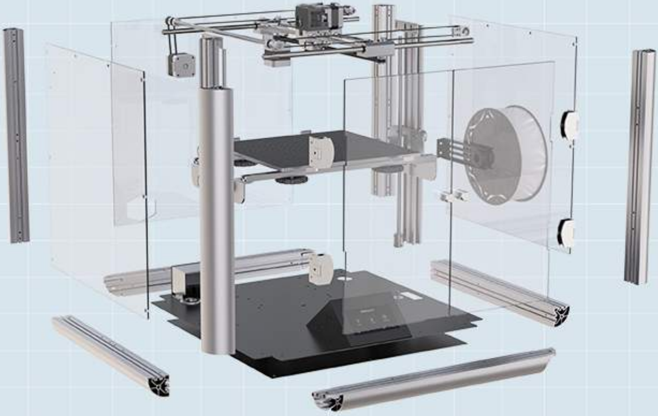

Enclosed Machine + DIY Fun

Safe and stable, the enclosed machine supports high-temp filaments, and Sermoon D1 with DIY features gives you an unprecedented experience

1+1>2

New Experience Starts from Sermoon D1

The new design enhances your experience

Sermoon D1

Industrial-grade printing

Exquisite appearance

Transparent design

Dual-Z axis screw

Variable voltage power supply

Excellent nozzle structure

All-metal extrusion

Smart sensor

Silent mainboard

New Technology
New Innovation

Elegant design

The silver-gray color, arc edge and smooth lines, simple appearance leaves a deep impression

Stable
Sturdy and Quality

Sheet
metal
base

Semi-closed chamber with sheet metal base features higher stability, provides a silent printing environment

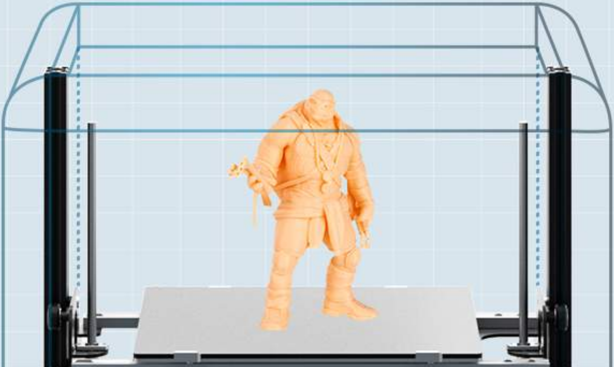

Transparent Design for Easy Viewing the Printing

Aluminum alloy frame with a transparent double-door design is convenient to monitor the printing in all directions

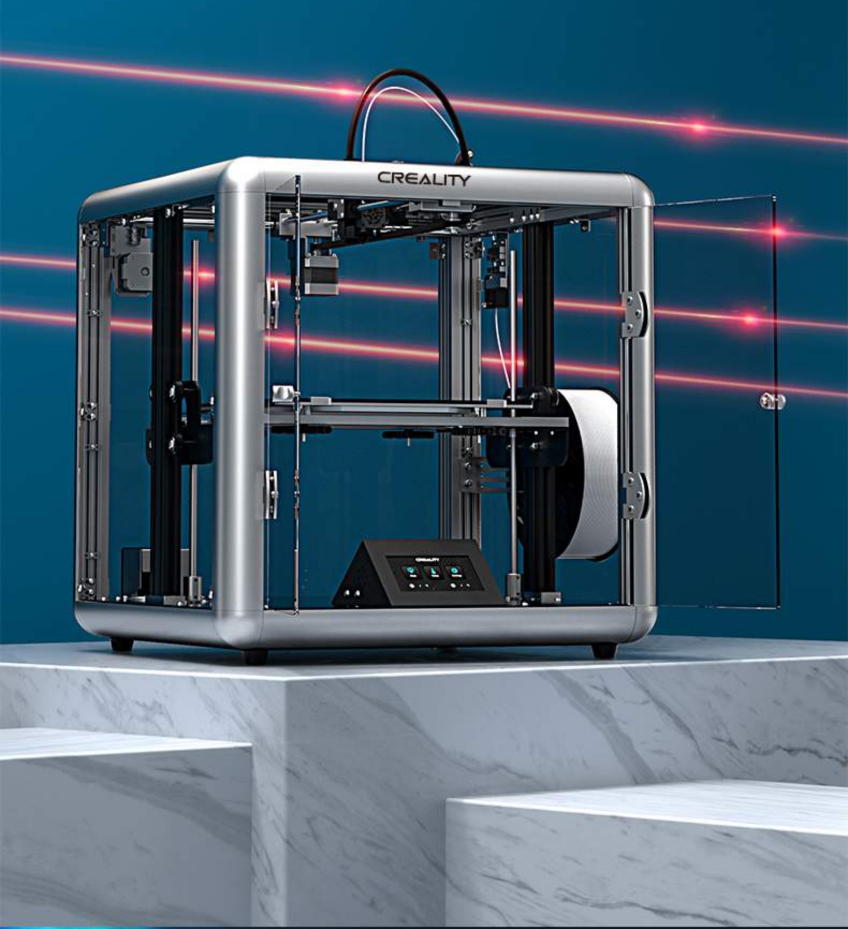

Variable Voltage Power

Supply, Safe and Stable

Quality power supply can adapt to different voltages, more safe and stable

- High efficiency
- High adaptability
- High reliability

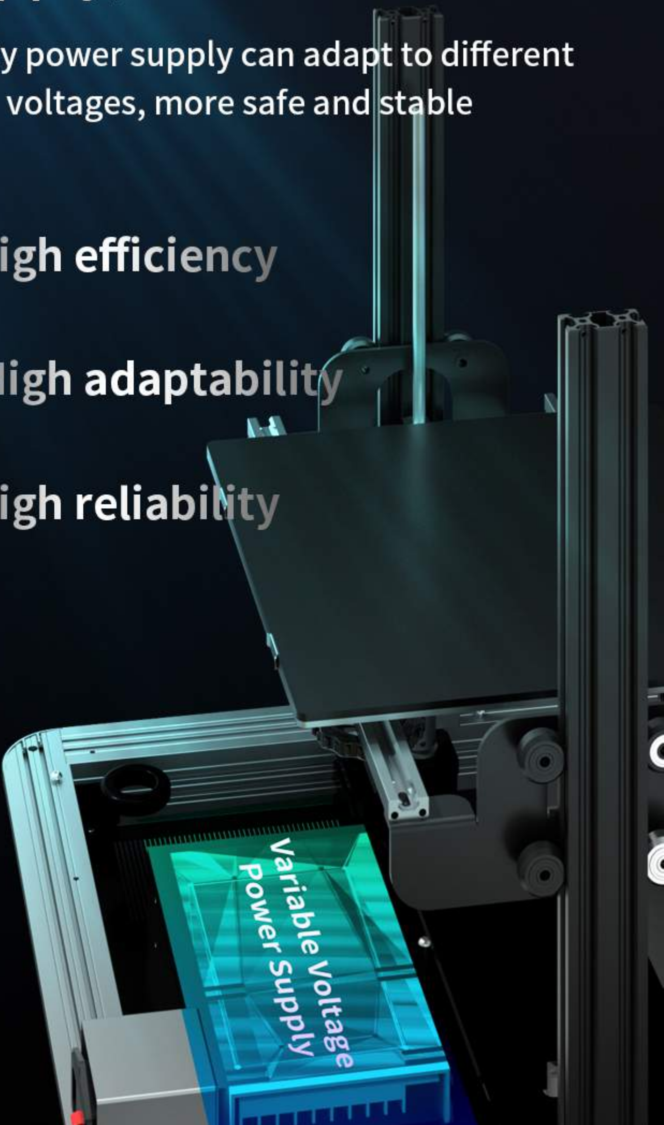

Double Z-axis Screw Rod Precision and Stability

With double z-axis, T-type double screw rod,V-wheel synchronous component and XY synchronous bearing, higher precision and stability

Double **Z**-axis | **T**-screw rod

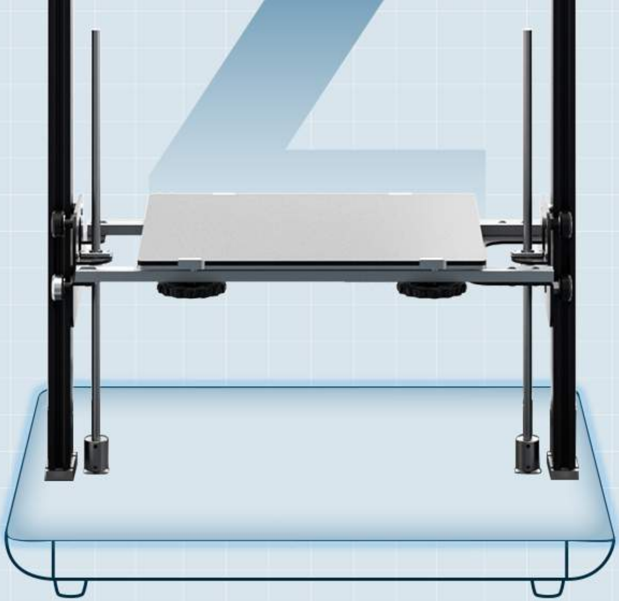

Quality and Silent Mainboard

Equipped with self-developed silent
mainboard, it operates with low noise

Low db

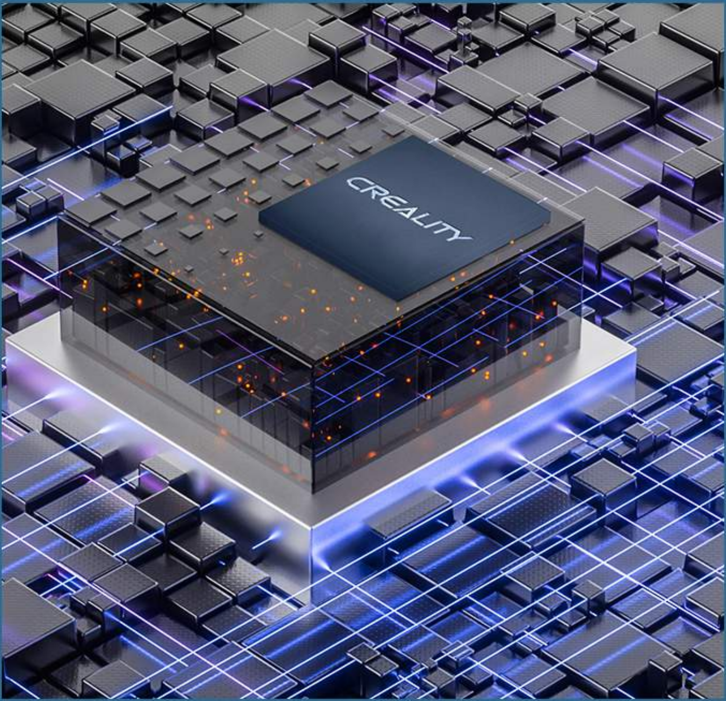

Excellent Nozzle Structure

High-power fan to heat dissipation effectively, smooth extruding and great durability

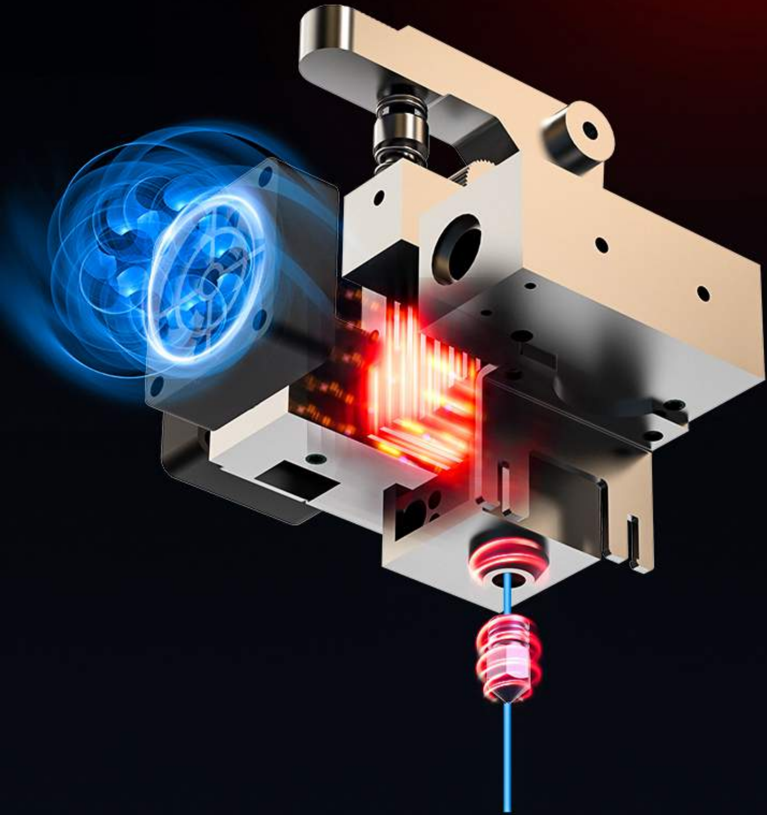

Smart Sensor

Filament Runout Sensor Resume Printing

Whatever lack of filaments or power failure, this device can realize the real-time protection and automatic storage of instructions, intelligent and reliable

Carborundum Glass Platform

Fast and even heating, printing without warping, and hassle-free removal

No warping
Easy removal
CREALITY
CREALITY

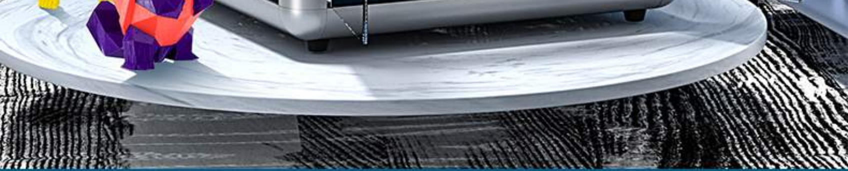

All Your Need Is Within Reach

All-metal extruder

Direct drive with strong extruding and easy feed-in ensures stable printing

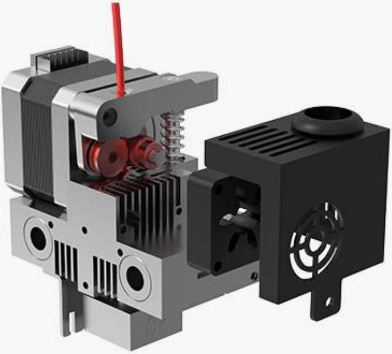

Sermoon D1

4.3-inch color touch screen

45° installation and easy operation

Big leveling nut

Friendly design, save and convenient

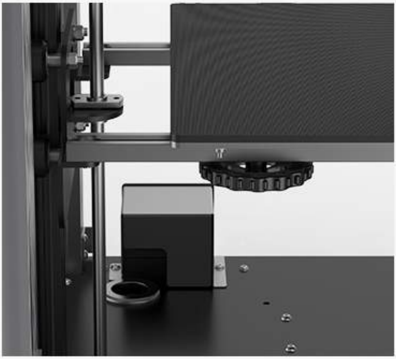

Sermoon D1

Applications

Education

manipulator

Industry

Building model

Architecture

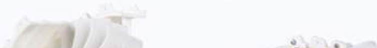

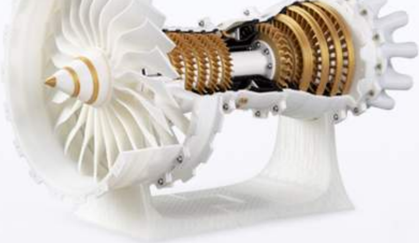

Industrial Garage Kit

Art

Props Weapon

Product Parameters

Molding technology: FDM

N.W.: 20.5kg

Language: Chinese/English

Layer thickness: 0.1mm-0.4mm

G.W.: 26.5kg

Printing accuracy: ±0.1mm

Print size: 280*260*310mm

Hotbed temperature: ≤100℃

Nozzle temperature: ≤250℃

Machine size: 500*500*531mm

Number of nozzles: 1

Supported filaments: PLA/ABS/TPU

Package size: 590*590*410mm

Display: 4.3-inch touch screen

Power supply: AC 100-240V, DC 24V

Nozzle diameter: Standard 0.4mm, optional 0.2mm/0.8mm/1.2mm

COMPANY INTRODUCTION

Shenzhen Creality 3D Technology Co., Ltd.

Creality 3D is an internationally renowned 3D printer manufacturer, national high-tech enterprise, and a pioneer in the R&D and mass production of FDM and resin 3D printers in China. Our company has been committed to applying 3D printers into market, delivering efficient and cost-effective integrated 3D printing solutions for individuals, families, schools and enterprises.

Headquartered in Shenzhen, Creality 3D has branches in Beijing, Shanghai and Wuhan, and cooperates with colleges and universities to build an industry-university-research teaching and internship base. We have a complete set of R&D, manufacturing and after-sales service system and strong technological strength.With a total area of 30,000㎡ , a team of over 1,000 employees, and monthly production capacity of over 800,000 units, Creality 3D prides itself on its large-scale R&D center and 3D printing laboratories and Creality research institute. Coupled with modern production lines working for 24 hours nonstop and demanding quality control system, the excellent product quality is thus guaranteed from the source. The products have been sold to more than 100 countries and regions, and have been ranked in the top of the global 3D printer sales list for a long time.

With initial aspirations never faltered, sticking to “customer–first” service concept, Creality 3D will keep passing on the spirit of the 3D printing industry evangelist to make better quality 3D printers and provide best service, enabling people to enjoy the convenience of technology and contributing to the rise of China’s intelligent

CREALITY 创想三维

CREALITY
www.creality.com