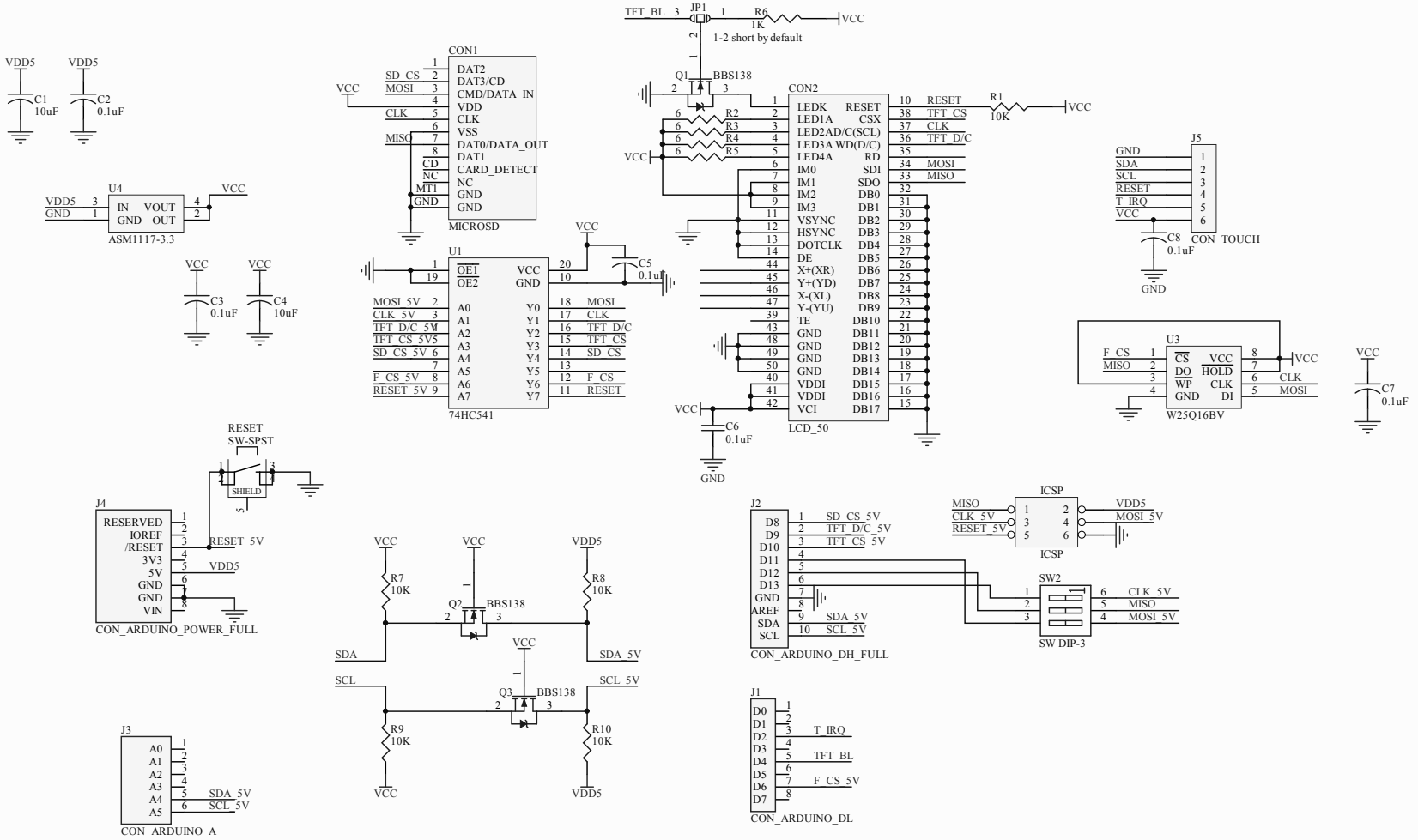

Title	2.8" TFT Display Module with Capacitive Touch	
Size B	Document Number DM-TFT28-116	Rev 1.0
Drawn By www.displaymodule.com	Date 2015/08/05	Sheet 1 of 1