REVISIONS				
ZONE	REV.	DESCRIPTION	DATE	APPROVED

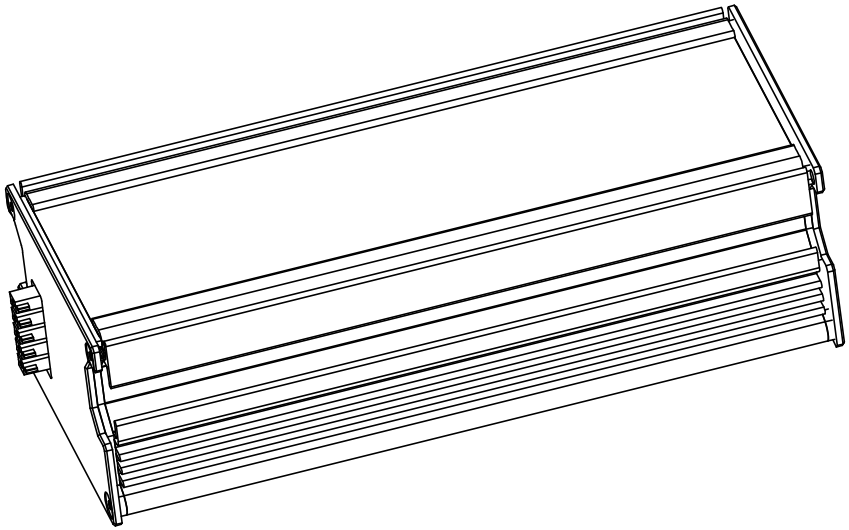

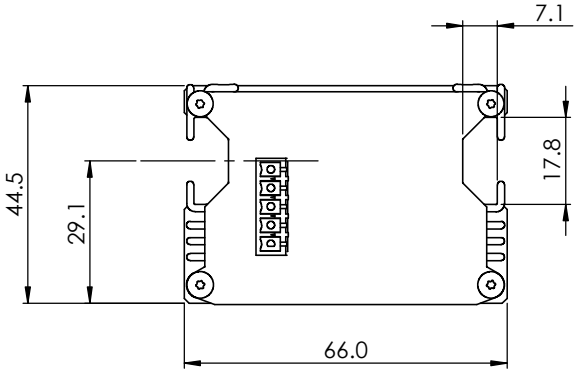

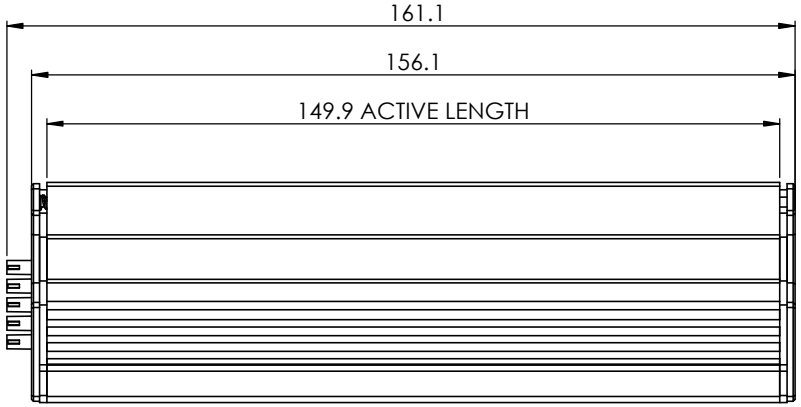

NEXT ASSY	USED ON
APPLICATION	

UNLESS OTHERWISE SPECIFIED:

DIMENSIONS ARE IN MM
TOLERANCES:
FRACTIONAL ±1-64
ANGULAR: MACH ±.25° BEND ±3°
TWO PLACE DECIMAL ±.10 mm
THREE PLACE DECIMAL ±.01 mm

INTERPRET GEOMETRIC TOLERANCING PER:

MATERIAL

FINISH

	DATE	NAME
DRAWN BY	7/13/2011	
CHECKED		
ENG APPR.		
MFG APPR.		
Q.A.		

COMMENTS:

PROPRIETARY AND CONFIDENTIAL

THE INFORMATION CONTAINED IN THIS DRAWING IS THE SOLE PROPERTY OF SmartVisionLights. ANY REPRODUCTION IN PART OR AS A WHOLE WITHOUT THE WRITTEN PERMISSION OF SmartVisionLights IS PROHIBITED.

LX150

SmartVisionLights.Com

matt@smartvisionlights.com

SIZE	DWG. Name	REV
B	LX150-	

SCALE: 1:1 | SHEET 1 OF 1

Path: Z:\2010\SVL\10321 linear extrusion\LX150\CUSTOMER CAD\