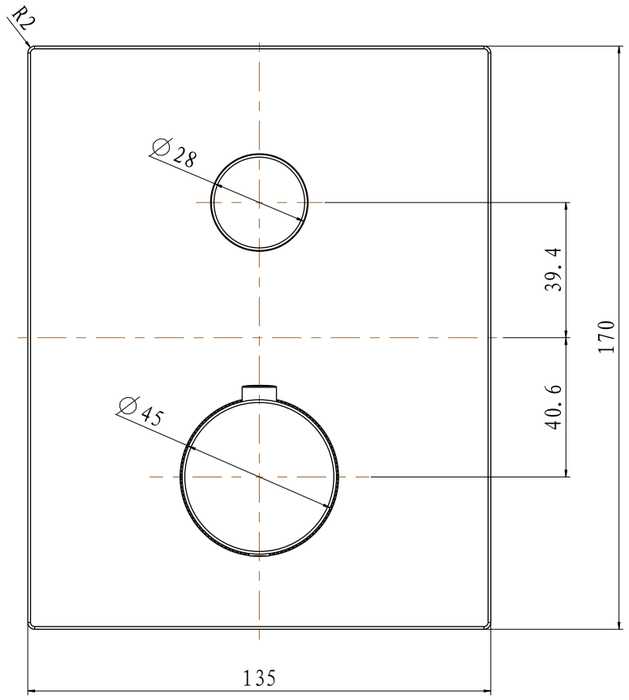
R2
∅28
∅45
39.4
40.6
170
135

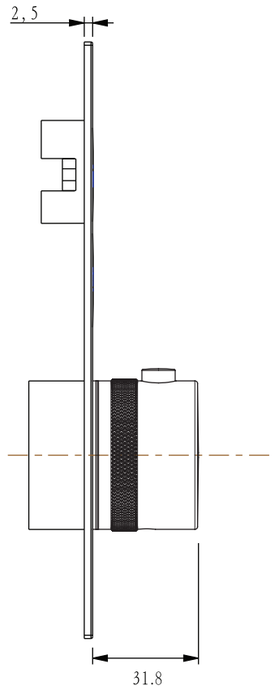
2.5
31.8

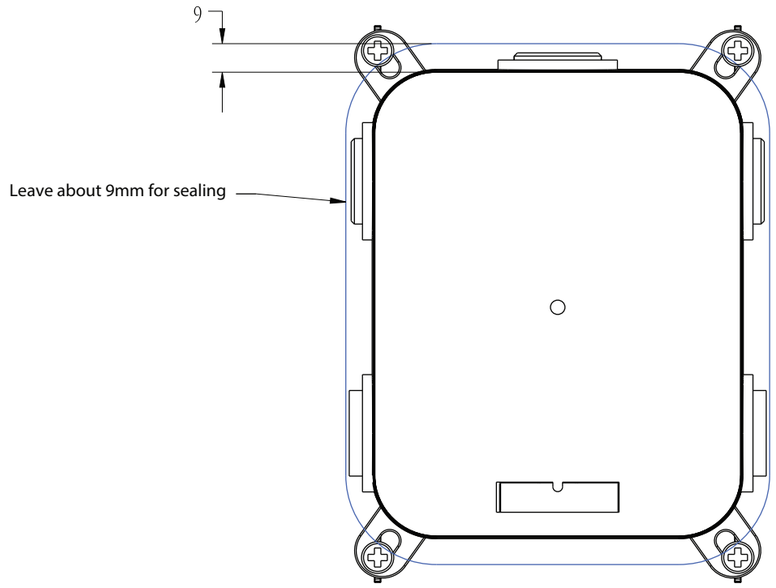
9
Leave about 9mm for sealing

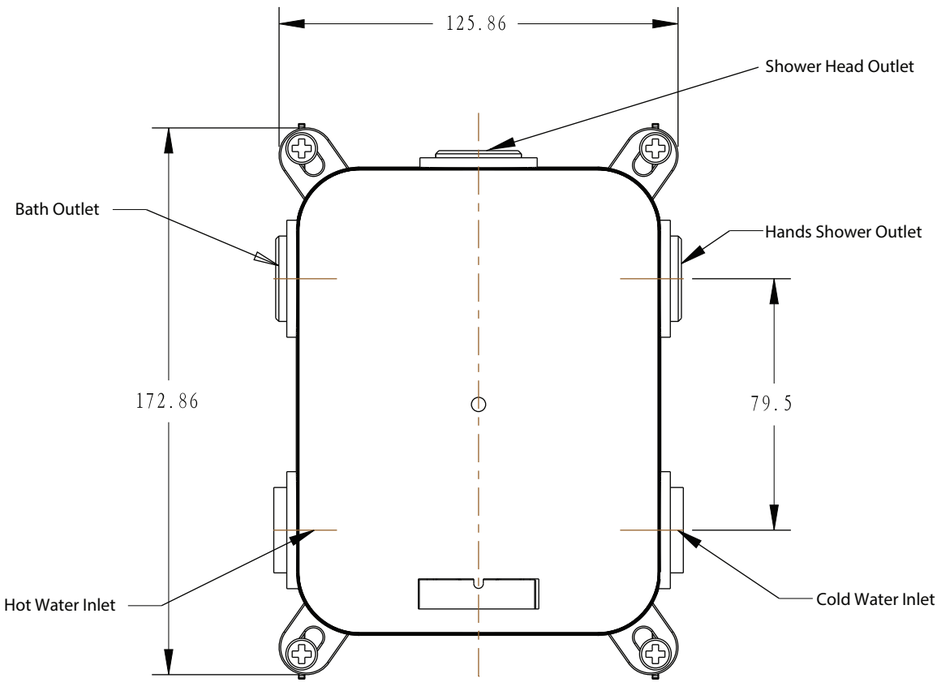
125.86
Shower Head Outlet
Bath Outlet
Hands Shower Outlet
172.86
79.5
Hot Water Inlet
Cold Water Inlet

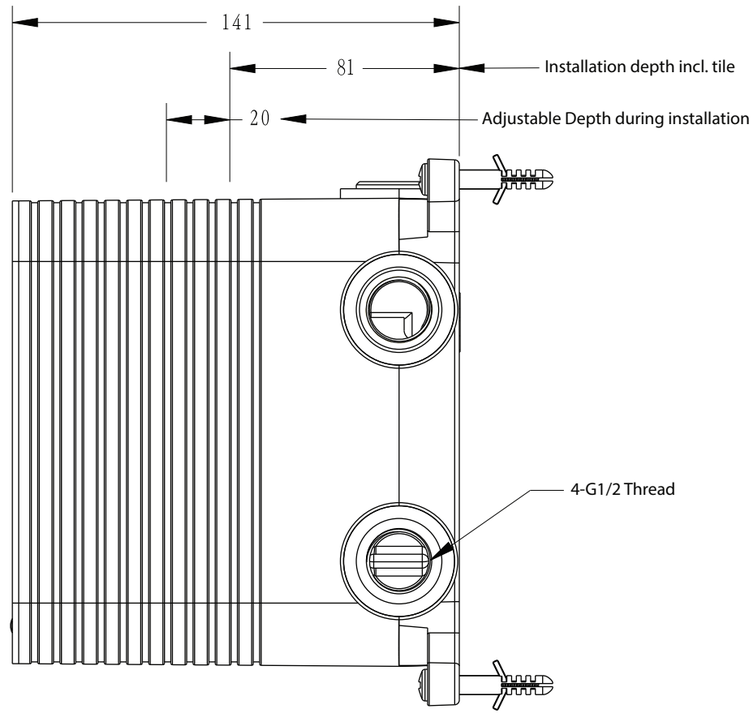
141
81
Installation depth incl. tile
20
Adjustable Depth during installation
4-G1/2 Thread

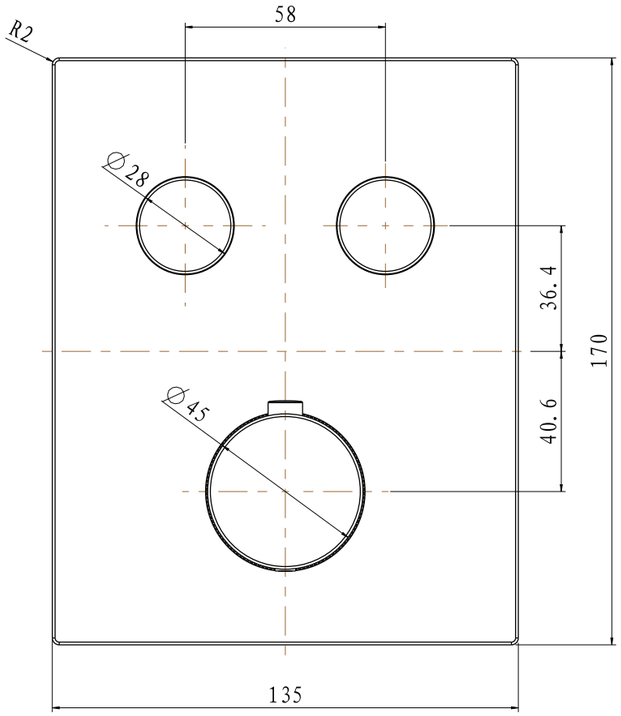
R2
58
Ø28
Ø45
36.4
40.6
170
135

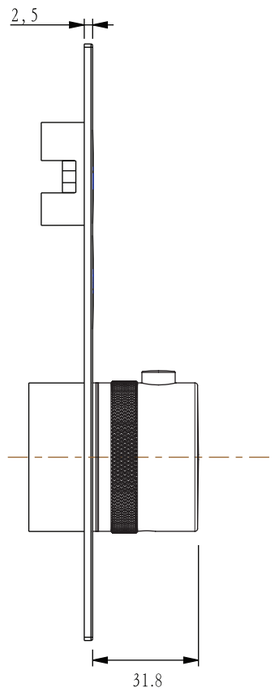
2,5
31.8

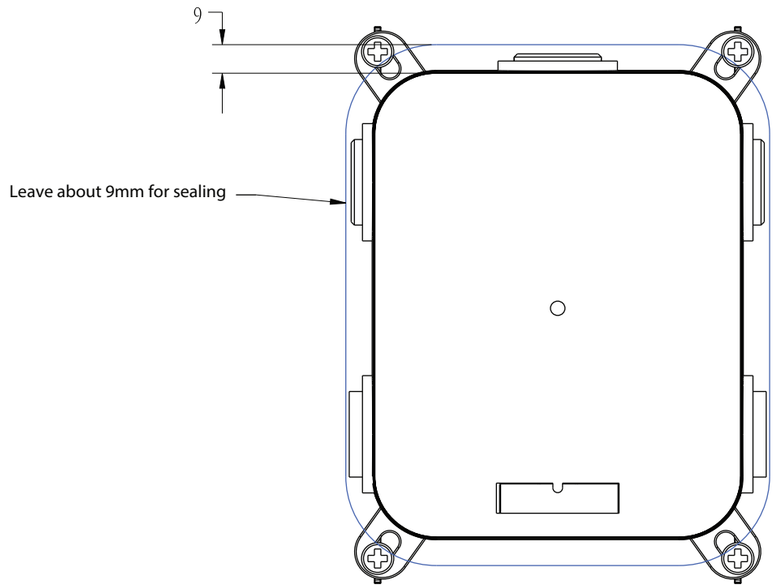
9
Leave about 9mm for sealing

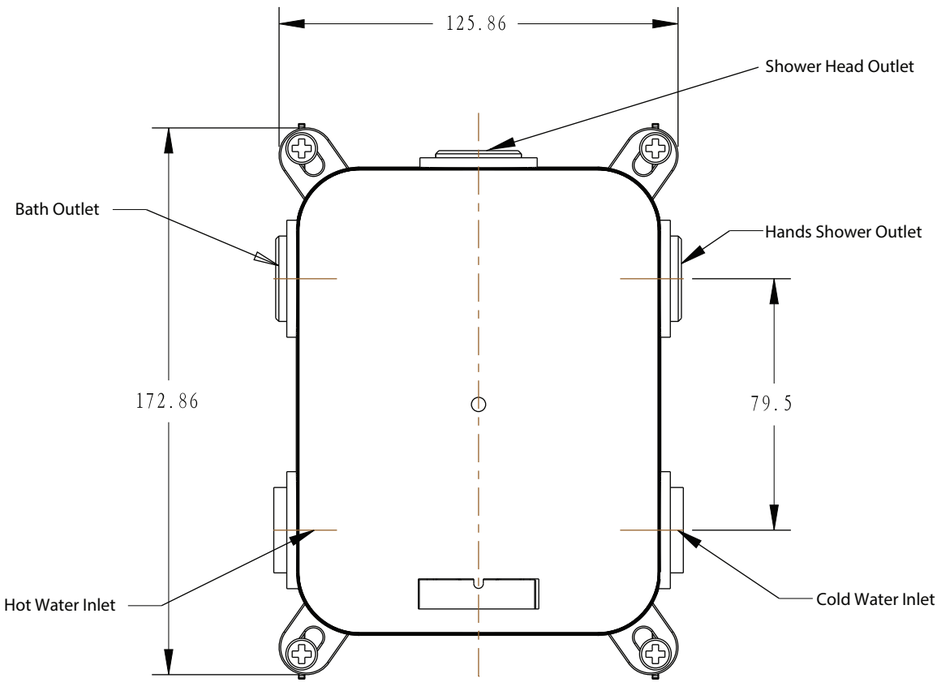
125.86
Shower Head Outlet
Bath Outlet
Hands Shower Outlet
172.86
79.5
Hot Water Inlet
Cold Water Inlet

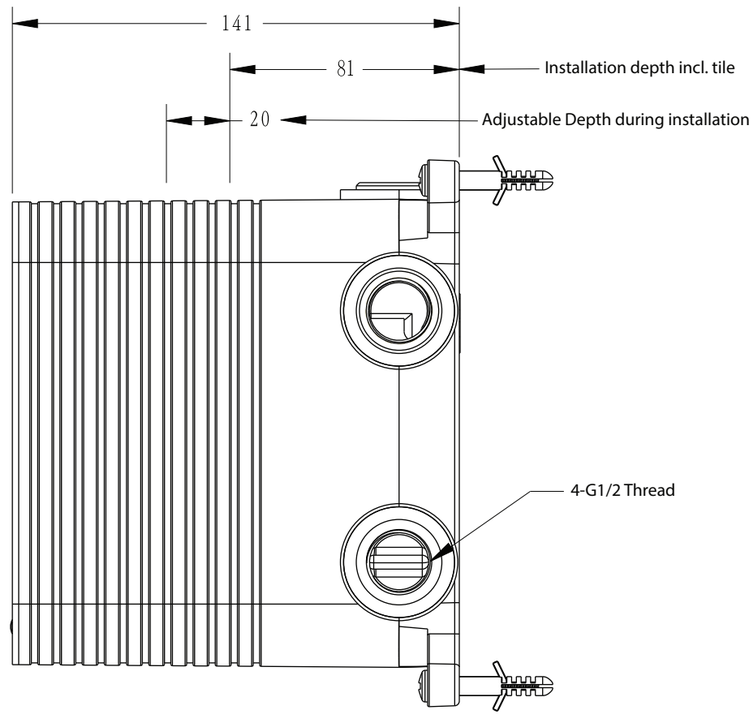
141
81
Installation depth incl. tile
20
Adjustable Depth during installation
4-G1/2 Thread