NOVAS

PRIME WALL BASIN MIXER

DETAILS

PRODUCT CODE
PRMWBM & IWCBPRM

INCLUSIONS
Fixing Kit & In Wall Body

INSTALLATION TYPE
Wall Mount

MATERIAL
316 Grade Stainless Steel

PRODUCT SERIES
Prime

WELS RATING
Subject to WELS rating certification

WARRANTIES
25 Years

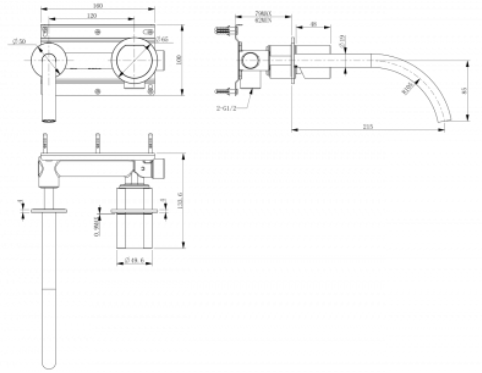

FINISHES

Satin Stainless Steel (SSS)
Satin Black (SBL)
Gun Metal (GM)

CERTIFICATIONS

Quality System
Quality Endorsed Company
ISO 9001