STUDIO BAGNO

FORM CIRCLE

STYLE

Bench Basin

CODE

FRM45

COLOURS

White

Premium Colours Available

OVERFLOW & WASTE

32 mm non-overflow plug
& waste not included.

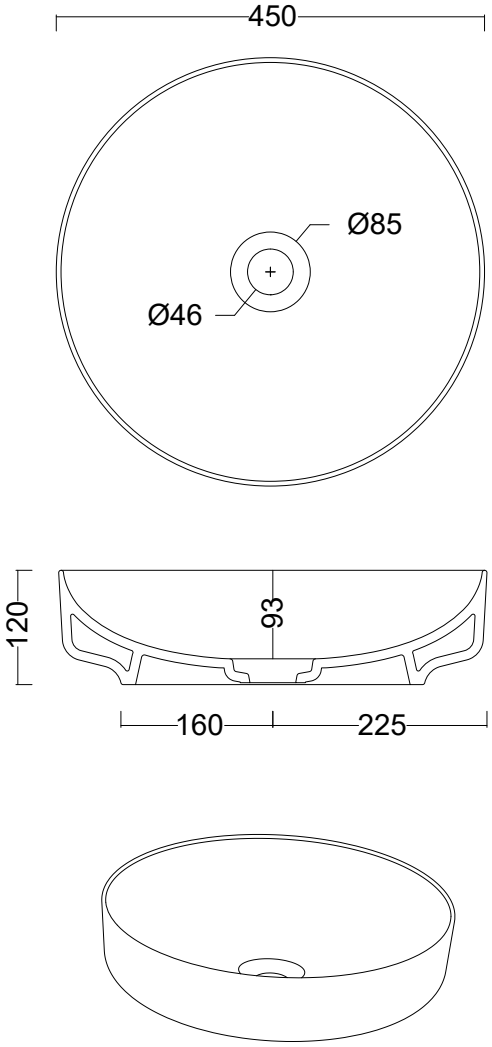

Just BATHROOMWARE

Note:All dimensionsare in millimetresand are subject to normal manufacturing variances.
Studio Bagno Pty Ltd reserves the right to vary specifications at any time without notice. Date created: 25/07/2018