Just BATHROOMWARE

REVISION TABLE	
LETTER	DATE
A	25-Aug-14

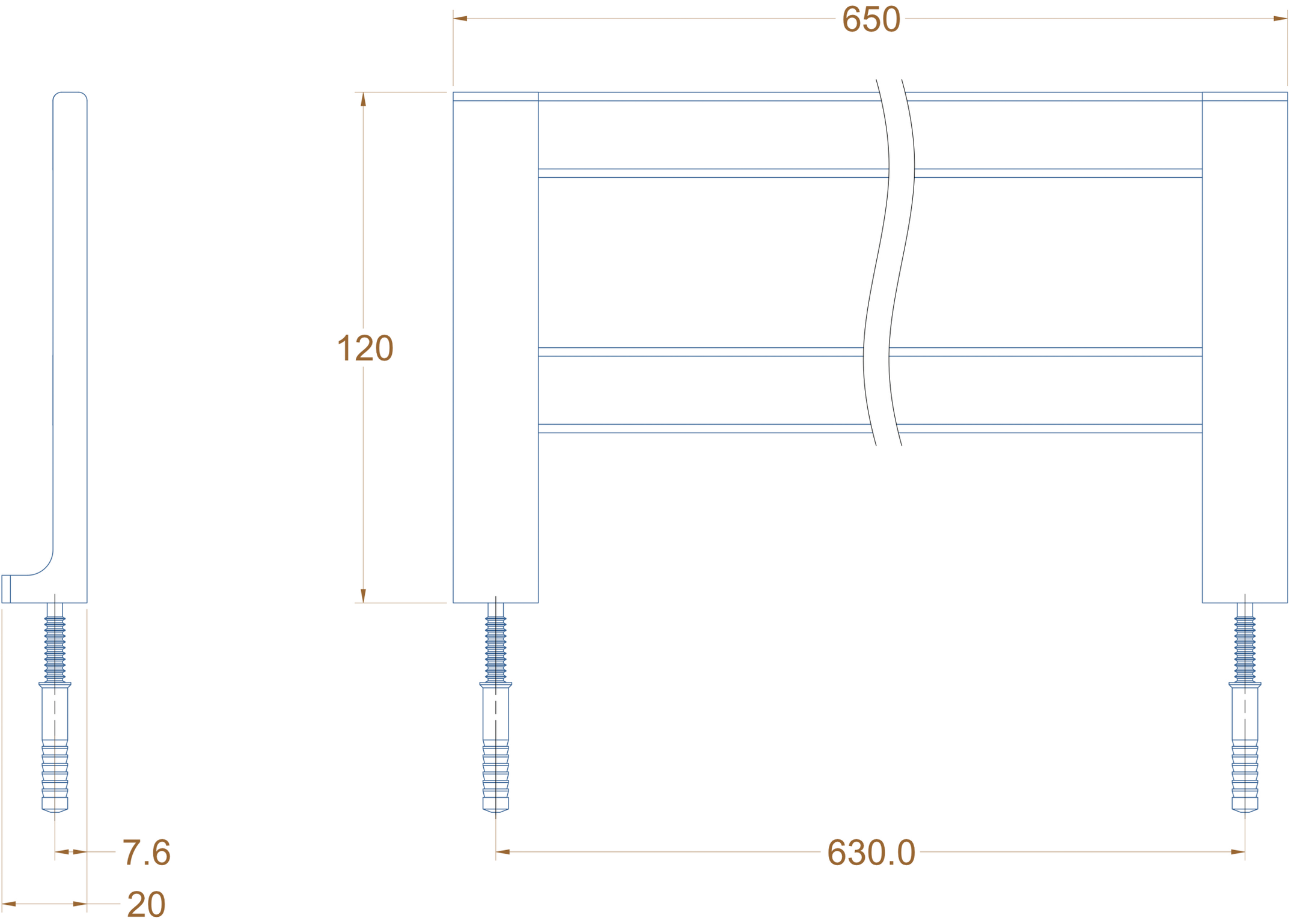

Just BATHROOMWARE
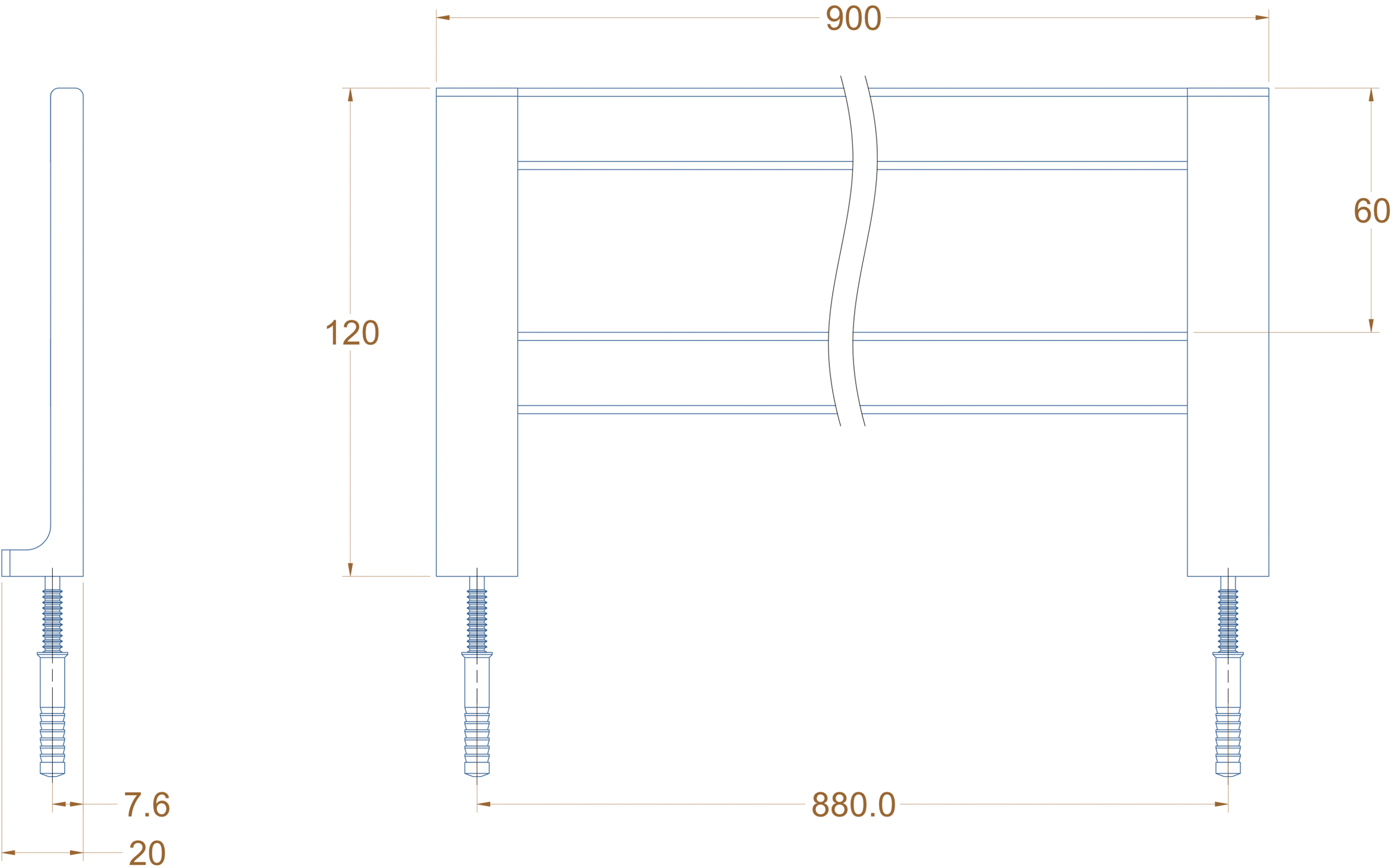
REVISION TABLE	
LETTER	DATE
A	25-Aug-14