UCPA Tapped Base Pillow Blocks

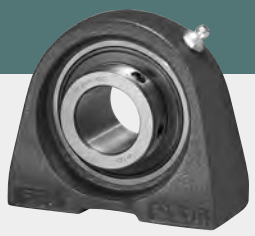

B-type Seal

L3-type Seal

Standard duty with set screw lock.

- Cast iron housing
- Wide inner race bearing
- B-type seals
  L3-type seals available in some sizes

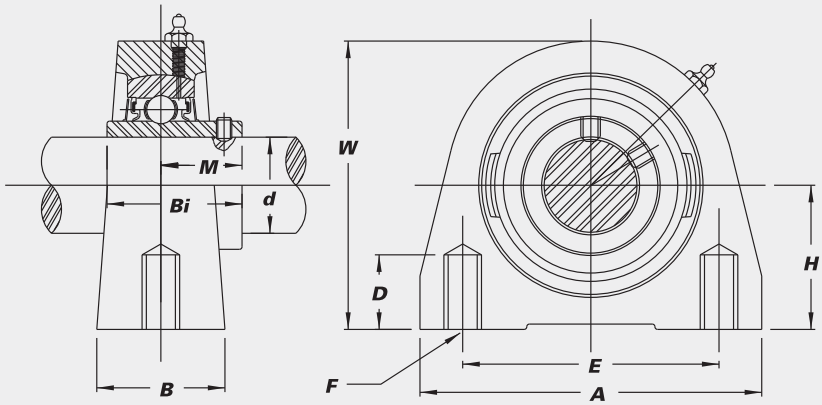

Unit No.	Shaft Dia. d (in.)	Shaft Dia. d (mm)	H	A	E	B	W	F-Tapped Holes	D-Min Tap Depth	M	Bi	Bearing No.	Housing No.	Weight (lbs.)
			Dimensions (in.)											
			Dimensions (mm)											
UCPA 201-8	1/2		1 5/16	2 7/8	2	1 1/2	2 9/16	3/8"-16	1/2	0.7205	1.2205	UC 201-8	PA 204	1.4
202-10	5/8		33.3	73	50.8	38	65	UNC	13	18.3	31.0	202-10		
203		17										203		
204-12	3/4											204-12		
204		20										204		
UCPA 205-14	7/8		1 7/16	3	2	1 1/2	2 13/16	3/8"-16	1/2	0.7756	1.3386	UC 205-14	PA 205	1.6
205-15	15/16		36.5	76	50.8	38	71	UNC	13	19.7	34.0	205-15		
205		25										205		
205-16	1											205-16		
UCPA 206-17	1 1/16		1 11/16	4	3	1 1/2	3 3/8	7/16"-14	5/8	0.8740	1.5000	UC 206-17	PA 206	2.6
206-18	1 1/8		42.9	102	76.2	38	86	UNC	16	22.2	38.1	206-18		
206		30										206		
206-19	1 3/16											206-19		
206-20	1 1/4S											206-20		
UCPA 207-20	1 1/4		1 7/8	4 1/4	3 1/4	1 7/8	3 3/4	1/2"-13	3/4	1.0000	1.6890	UC 207-20	PA 207	3.6
207-21	1 5/16		47.6	108	82.6	48	95	UNC	19	25.4	42.9	207-21		
207-22	1 3/8											207-22		
207		35										207		
207-23	1 7/16											207-23		
UCPA 208-24	1 1/2		1 15/16	4 5/8	3 1/2	1 7/8	3 15/16	1/2"-13	3/4	1.1890	1.9370	UC 208-24	PA 208	4.0
208-25	1 9/16		49.2	117	88.9	48	100	UNC	19	30.2	49.2	208-25		
208		40										208		
UCPA 209-26	1 5/8		2 1/8	5	3 3/4	2	4 1/4	1/2"-13	3/4	1.1890	1.9370	UC 209-26	PA 209	5.0
209-27	1 11/16		54.0	127	95.3	51	108	UNC	19	30.2	49.2	209-27		
209-28	1 3/4											209-28		
209		45										209		
UCPA 210-30	1 7/8		2 1/4	5 1/2	4	2	4 5/8	5/8"-11	7/8	1.2835	2.0315	UC 210-30	PA 210	5.9
210-31	1 15/16		57.2	140	101.6	51	117	UNC	22	32.6	51.6	210-31		
210		50										210		
210-32	2S											210-32		

Interchange Page 47