BROMIC HEATING

PRE-INSTALLATION CHECKLIST

FOR PLATINUM AND TUNGSTEN SMART-HEAT GAS RADIANT HEATERS

PLEASE PHOTOCOPY, COMPLETE, & SEND THIS CHECKLIST BY:

FAX TO (858) 346-1388 or

BY MAIL TO Bromic Heating, 18 Technology Dr, #121 Irvine, CA 92618

or SCAN AND SEND BY EMAIL TO support@patiofever.com

Business Name:

Date: / / (dd / mm / yyyy)

Site Address:

Suburb:

State: Zip:

Contact Name:

Position:

Ph: ( ) Fax: ( )

Cell:

How did you hear about our heaters?

- ☐ Magazine Name: .....
- ☐ Internet Website: .....
- ☐ Word of Mouth
- ☐ Newspaper Name: .....
- ☐ Directory Name: .....
- ☐ Salesperson
- ☐ Purchased from us before
- ☐ Seen on location Where: .....
- ☐ Other (please specify): .....

.....

Gas Type (please tick): NG ☐ LPG ☐

(i.e. does the gas come to the premises via bottles [LPG] or pipes [NG])

Application (please tick):

Commercial ☐ Domestic ☐

Description (eg. hotel):

Area dimensions (feet):

Length: Width:

Ceiling Height:

CLEARANCES:

Clearance requirements for Platinum and Tungsten Smart-Heat heaters are as follows:

(Note: adequate clearance must be directly above the heater)

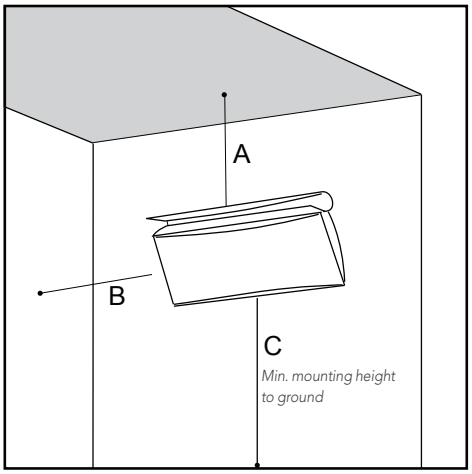

A) WALL MOUNT NO DEFLECTOR:

Minimum distance to combustible materials:

	A	B	C
Platinum and Tungsten Smart-Heat			
300	3.6' / 110cm	3.6'/ 110cm	8' / 244cm*
500	3.6' / 110cm	3.6' / 110cm	8' / 244cm*

*Please refer to local authorities for any additional mounting guidelines

B) WALL MOUNT WITH DEFLECTOR:

Minimum distance to combustible materials:

	A	B	C
Platinum and Tungsten Smart-Heat			
300	1.15' / 35cm	3.6' / 110cm	8' / 244cm*
500	1.15' / 35cm	3.6' / 110cm	8' / 244cm*

*Please refer to local authorities for any additional mounting guidelines

C) CEILING MOUNT NO DEFLECTOR:

Minimum distance to combustible materials:

	A	B	C
Platinum and Tungsten Smart-Heat			
300	3.6' / 110cm	3.6' / 110cm	8' / 244cm*
500	3.6' / 110cm	3.6' / 110cm	8' / 244cm*

*Please refer to local authorities for any additional mounting guidelines

D) CEILING MOUNT WITH DEFLECTOR:

Minimum distance to combustible materials:

	A	B	C
Platinum and Tungsten Smart-Heat			
300	1.15' / 35cm	3.6' / 110cm	8' / 244cm*
500	1.15' / 35cm	3.6' / 110cm	8' / 244cm*

*Please refer to local authorities for any additional mounting guidelines

Is the heater adequately covered? Y ☐ N ☐

(i.e. shielded from rain)

Is a protective cover required? Y ☐ N ☐

(cover may be required for environmental protection OR because of lower ceiling height)

Have site plans & digital photos been provided? Y ☐ N ☐

(NOTE: in order to more accurately review your heating requirements and provide a valid recommendation, a dimensioned plan and elevation views are required. Please also provide digital photos of the area).

If site plans not available, draw a sketch of the area showing all elevation views and open areas. Please include an appropriate scale.

Do you require a:

Ceiling Mount ☐ OR Wall Mount ☐

IF CEILING MOUNT:

Pole length required:

Ceiling material type:

IF WALL MOUNT:

Wall construction (wall material type)

Are there any wall obstructions? Y ☐ N ☐

(eg. speakers, TV, camera, lighting etc...)

Please describe briefly:

Will the bracket be mounted directly on the wall? Y ☐ N ☐

(any additional mountings [eg. angle mount bracket / pole] are the responsibility of the installer)

Is adequate power available? Y ☐ N ☐

(each heater requires 110V power and draws no more than 1A).

Does the site have existing plumbing for LPG or Natural Gas? Y ☐ N ☐

Distributors Name:

Person performing Survey:

Position:

Date: / / (dd / mm / yyyy)