Watec Accessory
Camera Housing

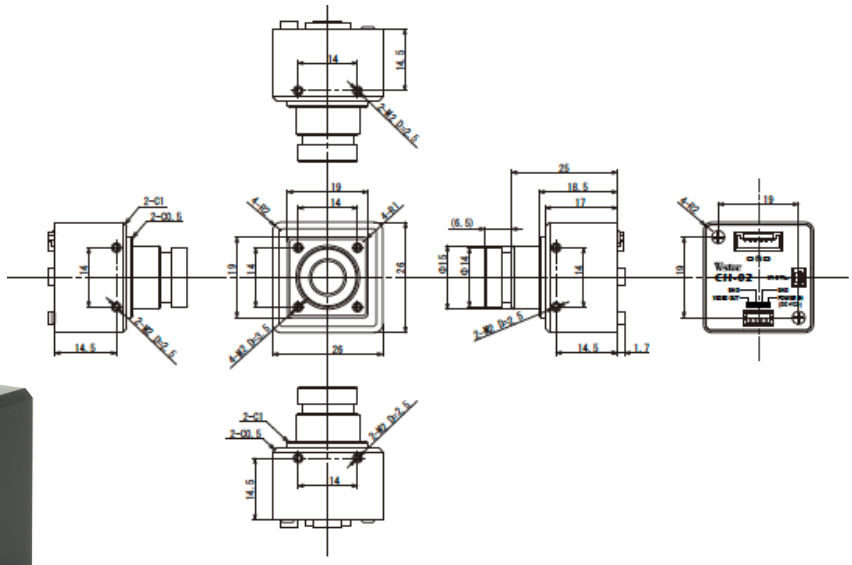

Part #: TSE-WAT-CH-02

The Watec CH-02 Camera Housing is specifically designed for the Watec WAT-1100MBD Housing with the Glass 3.7mm Lens. The Housing allows the user to surround the camera with a rugged Aluminum body to protect it and allow for different mounting provisions.

Specifications	
Supported Camera Models	WAT-1100MBD (G3.7)
Supported Lenses	2520BC-12, 2920BC-12, M3718BC-12, 0625BC-12, 0820BC-12, 1220BC-12, 2540EX014-M12
Installation Condition	Indoor
Material	Aluminum
Color	Black Alunite (Pearskin Finish)
Weight	Approx. 23.5g

Tactical Support Equipment Inc.
4039 Barefoot Road
Fayetteville, NC 28306
www.tserecon.com

For More Information
Contact sales@tserecon.com

Phone: 800.889.4030
Phone: 910.425.3360
Fax: 910.425.3361

Specifications subject to change without notice, the information in this document does not form part of any contract or quote.