Sotto Oval

STYLE

Undercounter

CODE

SBU02

WEIGHT & CAPACITY

6 kg

COLOURS

White, Gloss black,
Not glazed underneath.

OVERFLOW & WASTE

32mm overflow plug and
waste not included.

NOTES

Brackets included.

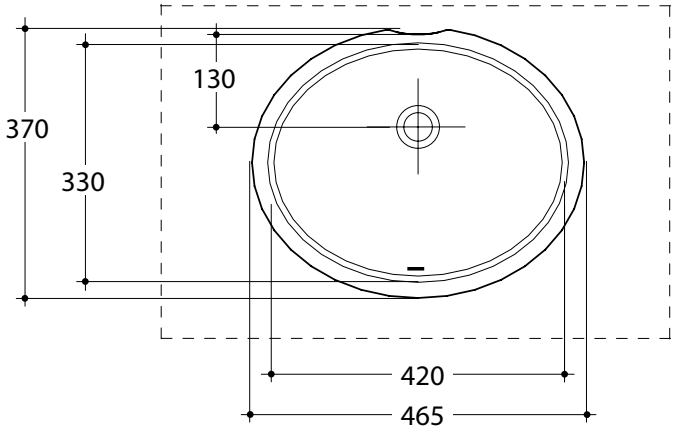

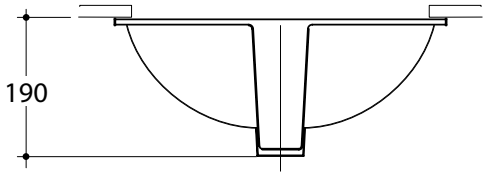

Note: All dimensions are in millimetres and are subject to normal manufacturing variances. Studio Bagno Pty Ltd reserves the right to vary specifications at any time without notice. **Date created:** 14/02/13.