STUDIO BAGNO

PROSSIMO 50

STYLE

Bench/Wall

CODE

NTH (NX255/0)
1TH (NX255/1)

WEIGHT

14.9 kg

COLOURS

White
Not glazed at rear

OVERFLOW & WASTE

32mm overflow plug and waste not included.

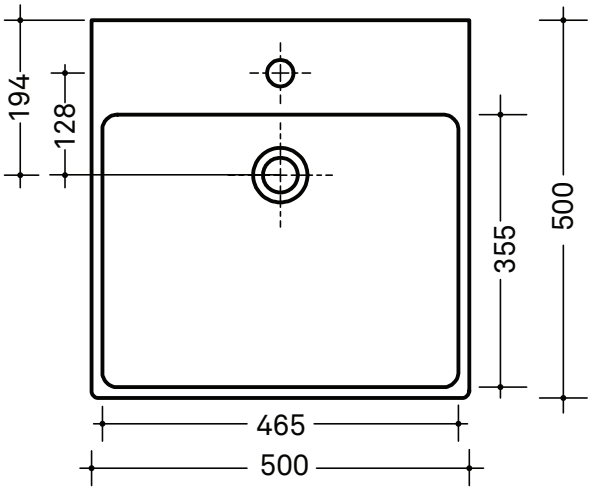

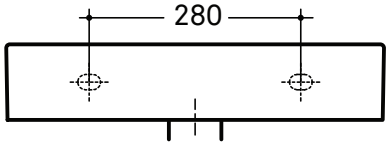

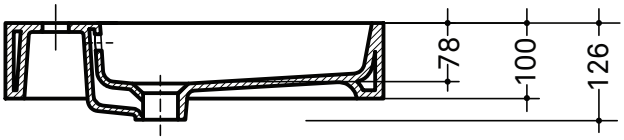

Note: All dimensions are in millimetres and are subject to normal manufacturing variances.
Studio Bagno Pty Ltd reserves the right to vary specifications at any time without notice.
Date created: 20/07/17