STUDIO BAGNO

MANHATTAN 50

STYLE

Undercounter Basin

CODE

MAN50U00L

WEIGHT & CAPACITY

15 kg

COLOURS

White, Externally glazed

OVERFLOW & WASTE

32 mm plug & waste not included

NOTES

Brackets included

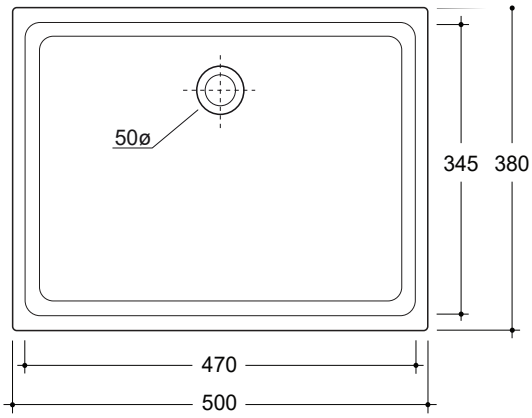

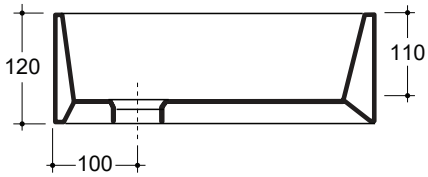

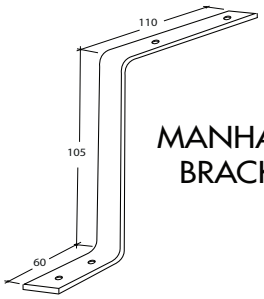

MANHATTAN BRACKETS

Note: All dimensions are in millimetres and are subject to normal manufacturing variances.
Studio Bagno Pty Ltd reserves the right to vary specifications at any time without notice. Date created: 11/07/2019