IMPERO 70

STYLE

Pedestal & Basin

CODE

1TH (IMP70/1)
3TH (IMP70/3)

WEIGHT

22 kg (Basin)
13 kg (Pedestal)

COLOURS

White, Not glazed at rear.

OVERFLOW & WASTE

32 mm overflow plug & waste not included.

INCLUSIONS

Wall fixing bolts included.

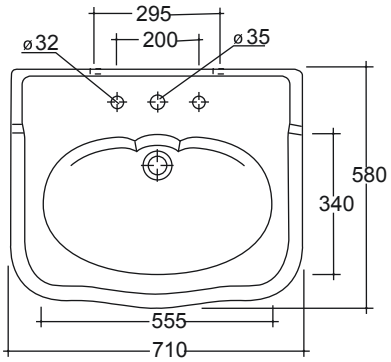

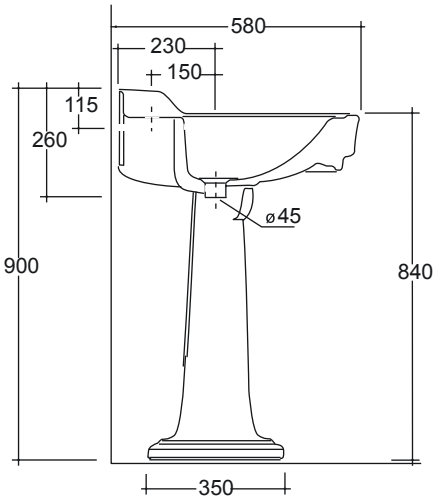

Note: All dimensions are in millimetres and are subject to normal manufacturing variances. Studio Bagno Pty Ltd reserves the right to vary specifications at any time without notice. Date created: 27/07/16.