Acqua 45

STYLE

Wall/Inset

CODE

SB4550

WEIGHT & CAPACITY

20 kg, 18 litres

COLOURS

White Gloss

OVERFLOW & WASTE

32 mm overflow plug & waste not included.

Suitable for bathroom & laundry applications.

INCLUSIONS

Wall fixing bolts included.

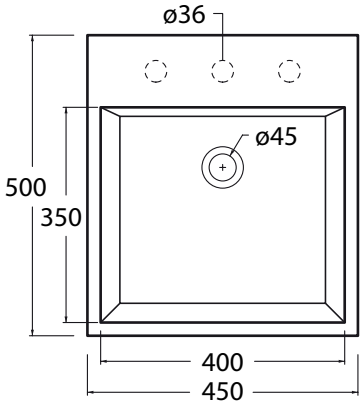

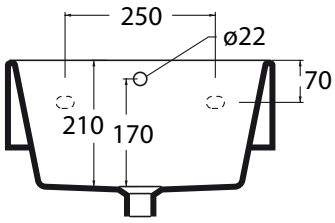

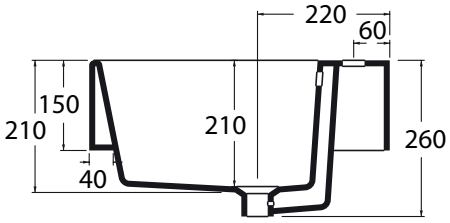

Note: All dimensions are in millimetres and are subject to normal manufacturing variances. Studio Bagno Pty Ltd reserves the right to vary specifications at any time without notice. **Date created:** 14/02/13.