ASSEMBLE

A81.07.V9.69

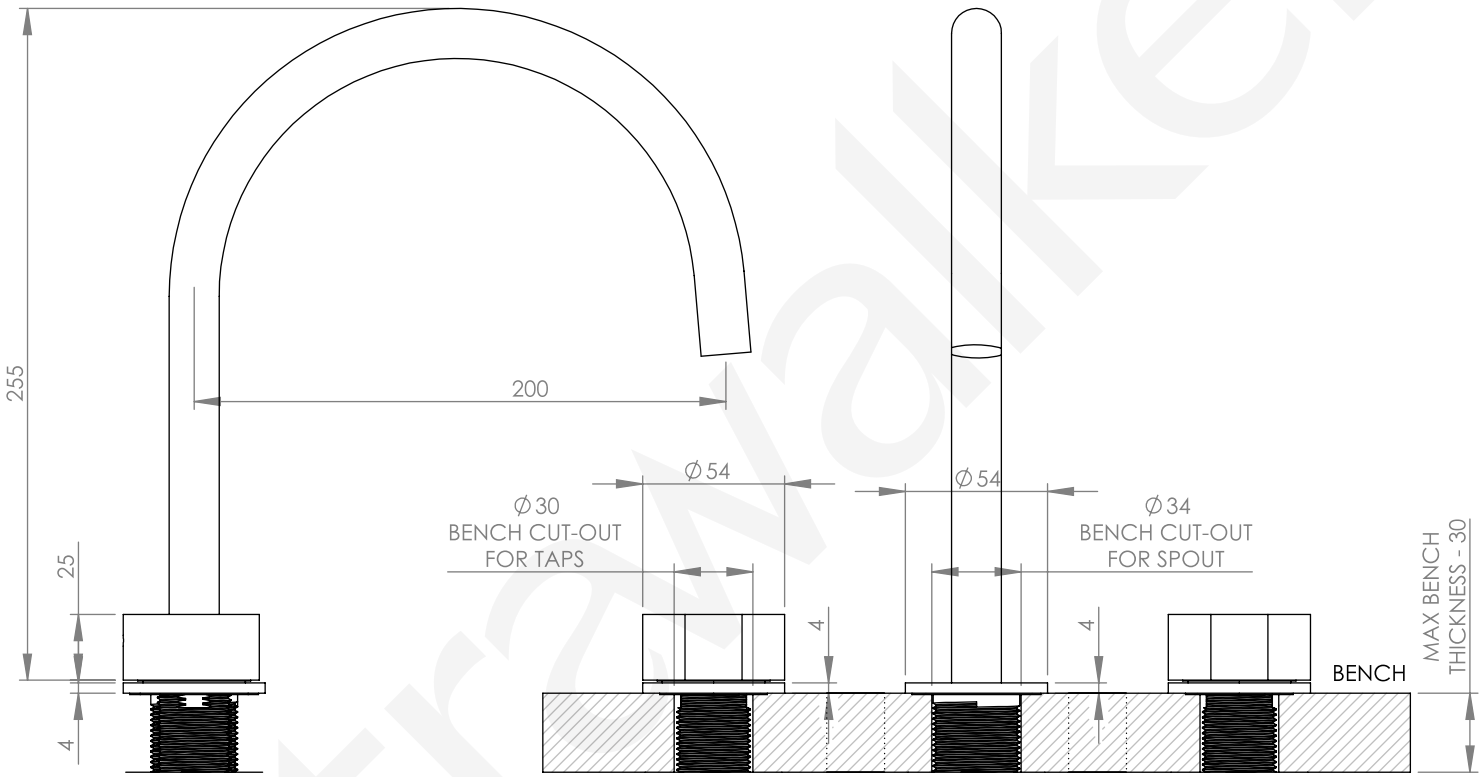

astrawalker™