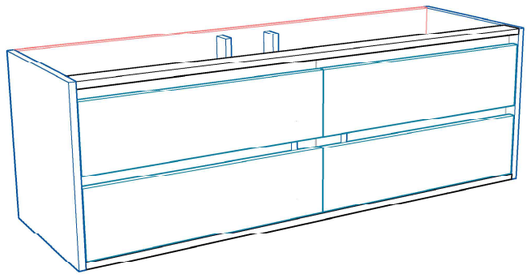

Isometric view
Realistic

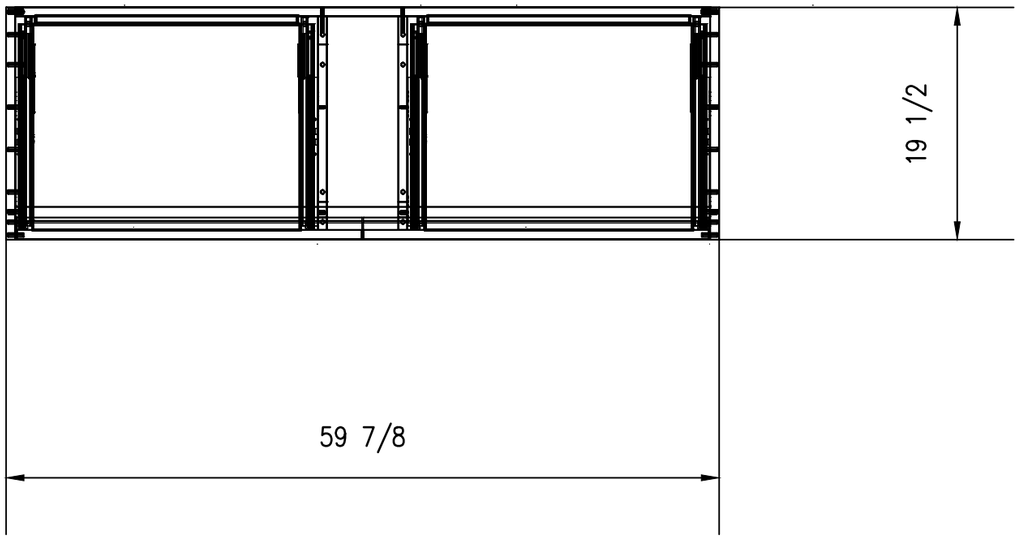

View from top: 1:10@A3
2D Wireframe

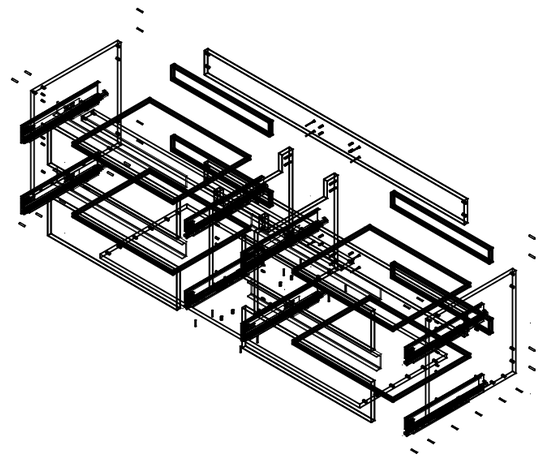

Exploded view
X-Ray

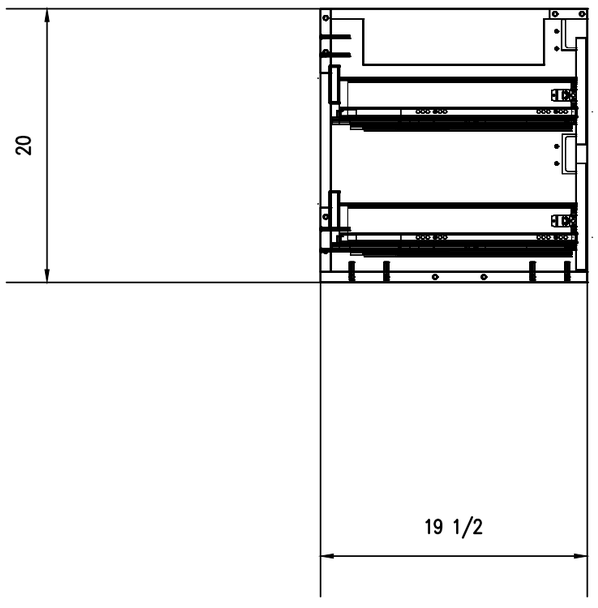

View from right: 1:10@A3
2D Wireframe

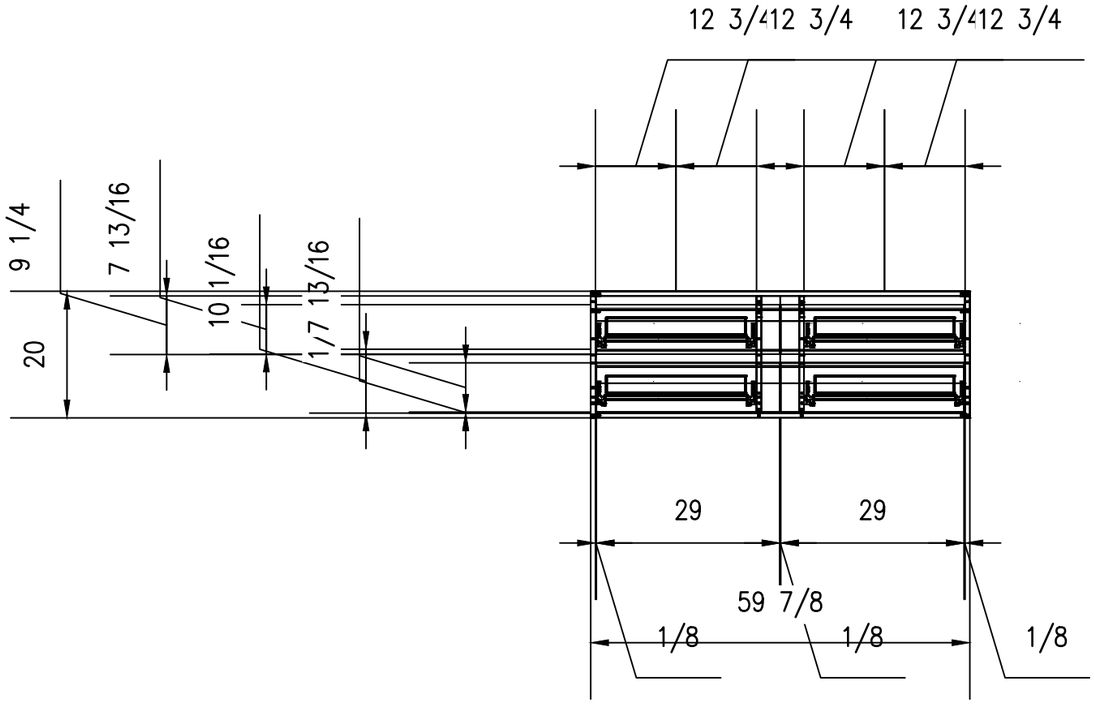

Front view: 1:10@A3
2D Wireframe

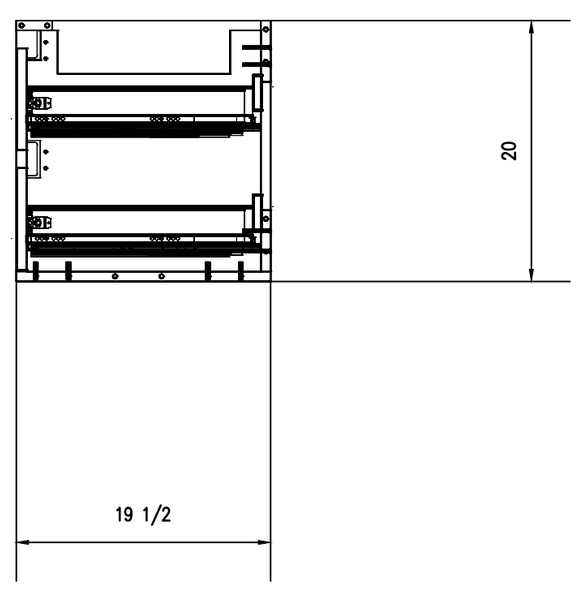

View from right: 1:10@A3
2D Wireframe

Articleinfo		Articleinfo		Dimensions / Weight / Position		Ordercolors		Adressinfo	
Articleinfo 1		Articleinfo 6		Article Height	20	Ordercolor 1		Address 1	
Articleinfo 2		Articleinfo 7		Article Width	59.9	Ordercolor 2		Address 2	
Articleinfo 3		Articleinfo 8		Article Depth	19.5	Ordercolor 3		Address 3	
Articleinfo 4		Articleinfo 9		Article Weight	0	Ordercolor 4		Zip	
Articleinfo 5		Articleinfo 10		Hierarchy Number	1	Ordercolor 5		Notice	

	Date	Articlename	Page
Current	2/8/2022	VH2DDBL3_GOLA	1
Modified	2/8/2022	Articledescription	Name
Created	2/8/2022	Article Designer Group	
Loading		Construction	Scale
Delivery		STANDARD	1:488.5 @ A3

MERCE

4612_1