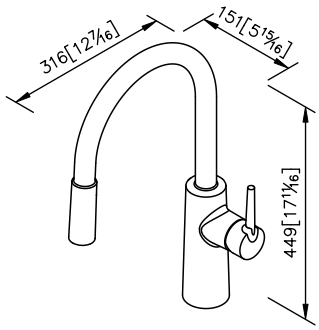
316[12 7/16]
151[5 15/16]
449[17 11/16]

unit: mm[inch]

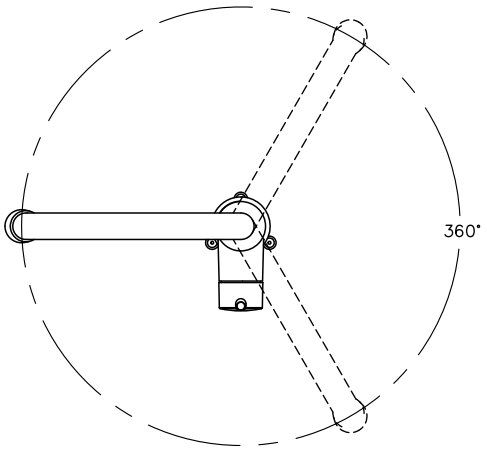
360°

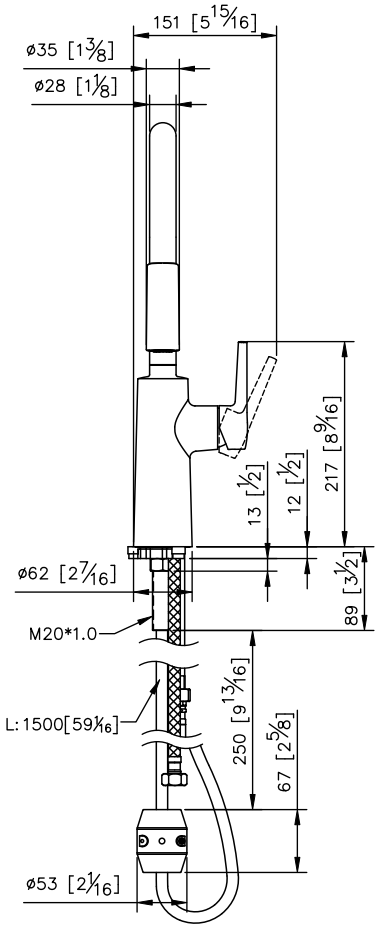
151 [5 15/16]
ø35 [1 3/8]
ø28 [1 1/8]
217 [8 9/16]
12 [1/2]
13 [1/2]
ø62 [2 7/16]
89 [3 1/2]
M20*1.0
L: 1500[59 1/16]
250 [9 13/16]
67 [2 5/8]
ø53 [2 1/16]

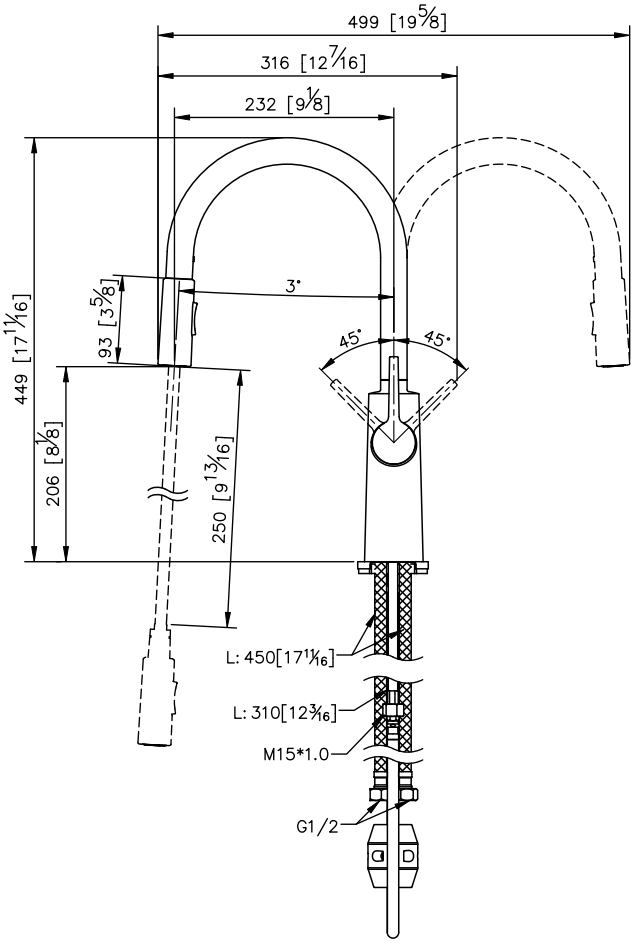
499 [19 5/8]
316 [12 7/16]
232 [9 1/8]
3°
93 [3 5/8]
449 [17 11/16]
45°
45°
206 [8 1/8]
250 [9 13/16]
L: 450[17 11/16]
L: 310[12 3/16]
M15*1.0
G1/2