Toilet close-coupled # 210609..00 |< 370 mm >|

2nd floor

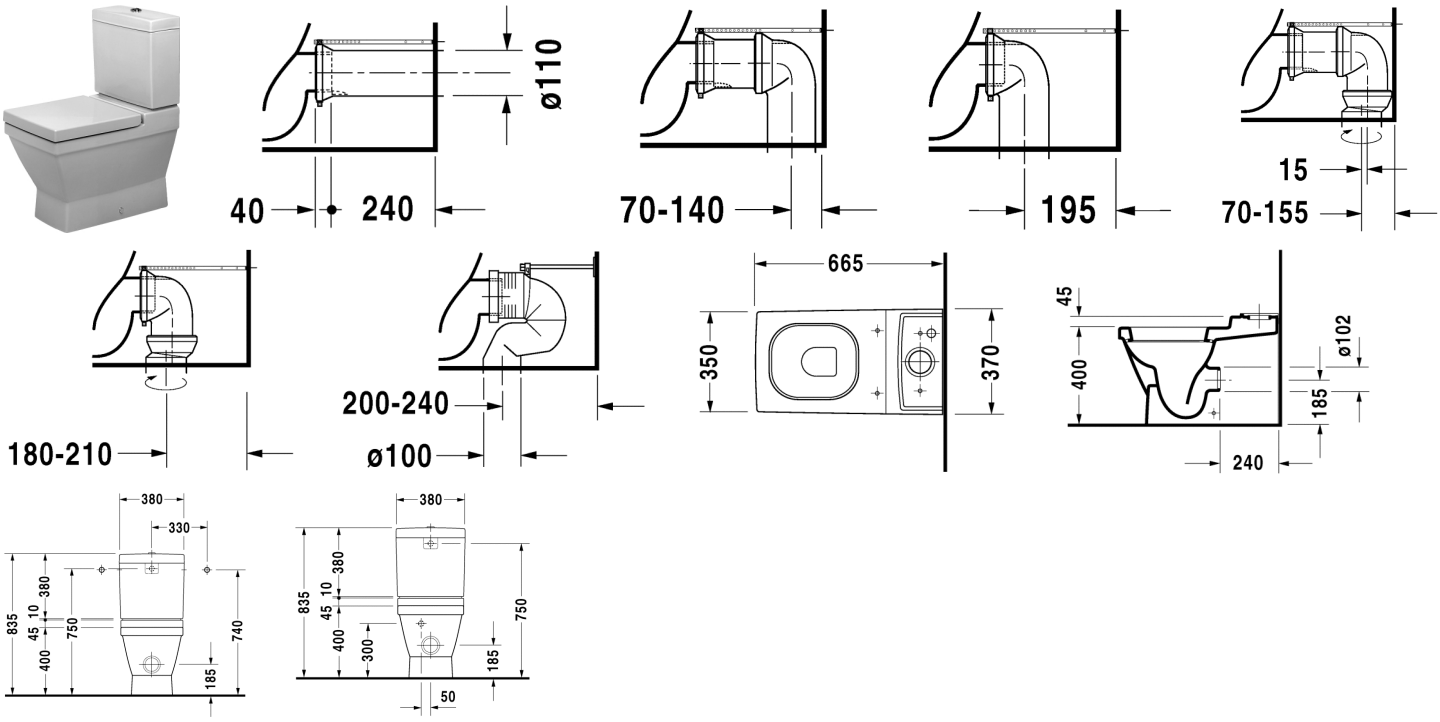

Toilet close-coupled	Dimension	Weight	Order number
washdown model, (without cistern), Outlet for Vario connector set, for horizontal and vertical outlet, length adjustable from 70 - 210 mm, and vario connecting bend, vertical outlet from 200 - 240 mm, fixings included			
Colors			
00 White Alpin			
Variant			
	370 x 665 mm	33,500 kg	210609..00
Accessories			
Cistern	380 x 180 mm	14,800 kg	087600
Cistern	380 x 180 mm	15,000 kg	087610
Toilet seat and cover	-	2,700 kg	006899
Vario connector set	ø 110 mm	1,500 kg	001422
Vario connecting bend	Ø 100 mm	0,700 kg	899025

All drawings contain the necessary measurements which are subject to standard tolerances. They are stated in mm and are non-binding. Exact measurements, in particular for customised installation scenarios, can only be taken from the finished ceramic piece.