myenergi

zappi

eco-smart EV charge point

Installation Manual

MODELS:

ZAPPI-2H07UW-G	ZAPPI-2H22UW-G
ZAPPI-2H07UB-G	ZAPPI-2H22TW-G
ZAPPI-2H07TW-G	ZAPPI-2H22UB-G
ZAPPI-2H07TB-G	ZAPPI-2H22TB-G

Rev 1.7 July 2023 – ENGLISH

Contents

NOTICE
The UK Government's Electric Vehicle (Smart Charge Points) Regulations 2021 have been introduced. Please ensure you read this manual fully before installing. Processes and features have changed.

Electric Vehicles (Smart Charge Points) Regulations 2021

From 30th June 2022, any EV charger installed in a private setting i.e. home or workplace, NOT public, in England, Scotland and Wales has to meet the Electric Vehicles (Smart Charge Points) Regulations 2021.

From 30th December 2022, further regulations come into force.

To ensure all our zappis are compliant by the date the regulations come into force we will be taking a phased approach with the implementation of certain features.

For information on how these new regulations may affect you and your myenergi zappi please read the appended information at the back of this manual.

Appendix A – (Electric Vehicle Smart Charge Points) Regulations 2021 – Regulations as of 30th June 2022

This Appendix is relevant to all zappis INSTALLED on or after the 30th June 2022

Appendix B - (Electric Vehicle Smart Charge Points) Regulations 2021 – Regulations as of 30th December 2022.

This appendix is relevant to zappis INSTALLED on or after 30th December 2022.

1. Introduction

Thank you for choosing zappi. Of course, we think you have made an excellent choice and are sure you will be incredibly happy with the features, benefits, and quality of your myenergi product.

These instructions will help you to familiarise yourself with the zappi. By reading the instructions, you will be sure to get the maximum benefit from your 'eco-smart' device.

2. Safety Information

zappi is an AC EV charger, intended to be installed in a fixed location and permanently connected to the AC supply network. It is a Class 1 item of electrical equipment in accordance with IEC 61140.

The unit is designed for indoor or outdoor use at a location with restricted access and should be mounted vertically either surface (wall) mounted or on the dedicated pole mount supplied separately by myenergi.

The device has been manufactured in accordance with the state of the art and the recognised safety standards, however, incorrect operation or misuse may result in:

- Injury or death to the operator or third parties
- Damage to the device and other property of the operator
- Inefficient operation of the device

All persons involved in commissioning, maintaining, and servicing the device must:

- Be suitably qualified
- Have knowledge of and experience in dealing with electrical installations
- Read and follow these operating instructions carefully
- Always disconnect the device from the supply before removing the cover

The device is not to be used by persons (including children) with reduced physical, sensory, or mental capabilities, or lack of experience and knowledge, unless they have been given supervision or instruction concerning use of the device by a person responsible for their safety.

zappi comes in either tethered or untethered variants. The untethered version should only be used with a dedicated cable fitted with a Type 2 plug which is compliant with EN 62196-1 and EN 62196-2. Adaptors or conversion adapters and cord extension sets are not allowed to be used.

Failure to install and operate the zappi in accordance with these instructions may damage the unit and invalidate the manufacturer's warranty.

3. Disposal

In accordance with European Directive 2002/96/EC on waste electrical and electronic equipment and its implementation in national law, used electrical devices **must** be collected separately and recycled in an environmentally responsible manner. Ensure that you return your used device to your dealer or obtain information regarding a local, authorised collection and disposal system. Failure to comply with this EU Directive may result in a negative impact on the environment.

4. Copyright

5. Overview

Microgeneration systems such as Solar PV and small wind turbines are at their most efficient when the generated energy is consumed on-site rather than exporting it to the grid. This is what we call 'self-consumption'.

zappi is a Mode 3 charging station, compatible with all electric vehicles that comply with EN 62196 and EN 61851-1 plug-in electric vehicle standards.

zappi works like any regular charging point but has special ECO charging modes that will benefit homeowners with grid-tied microgeneration systems e.g. wind or solar generation. Two special ECO charging modes automatically adjust charging current in response to on-site generation and household power consumption. In FAST charge mode, zappi operates like an ordinary EV charger.

A grid current sensor (supplied) simply clips around the incoming supply cable and is used to monitor excess power. When using the special ECO charge modes, zappi will automatically adjust the charge rate in response to available surplus.

Feature Set

- 3 charging modes: ECO, ECO+ & FAST
- Optimises microgeneration self-consumption
- Works with solar PV, wind turbine or micro-hydro systems
- Economy tariff sense input
- Programmable timer function
- Charge and event logging
- Remote control and monitoring add-on option
- Pin-code lock function
- Tap operated display backlight
- Built-in protection against the loss of the protective neutral and earth (PEN) conductor as required by BS 7671:2018 Amendment 1:2020(The “Wiring Regulations”)
- Ethernet connector (for local communications between myenergi devices)
- Integral cable holster (tethered units)
- Supplied with 1 x clip-on grid current sensor (x3 if purchasing a 3-phase unit)
- Illuminated display – for convenience, the display can be illuminated by simply tapping the zappi front cover.
- Integrated WiFi for connecting to internet.
- Front Lid Tamper Detection

5.1 Overview Diagram

The diagram on the next page shows the zappi as part of a complete energy management system. Other myenergi products are shown with details of how they integrate with the grid connection and the microgeneration system.

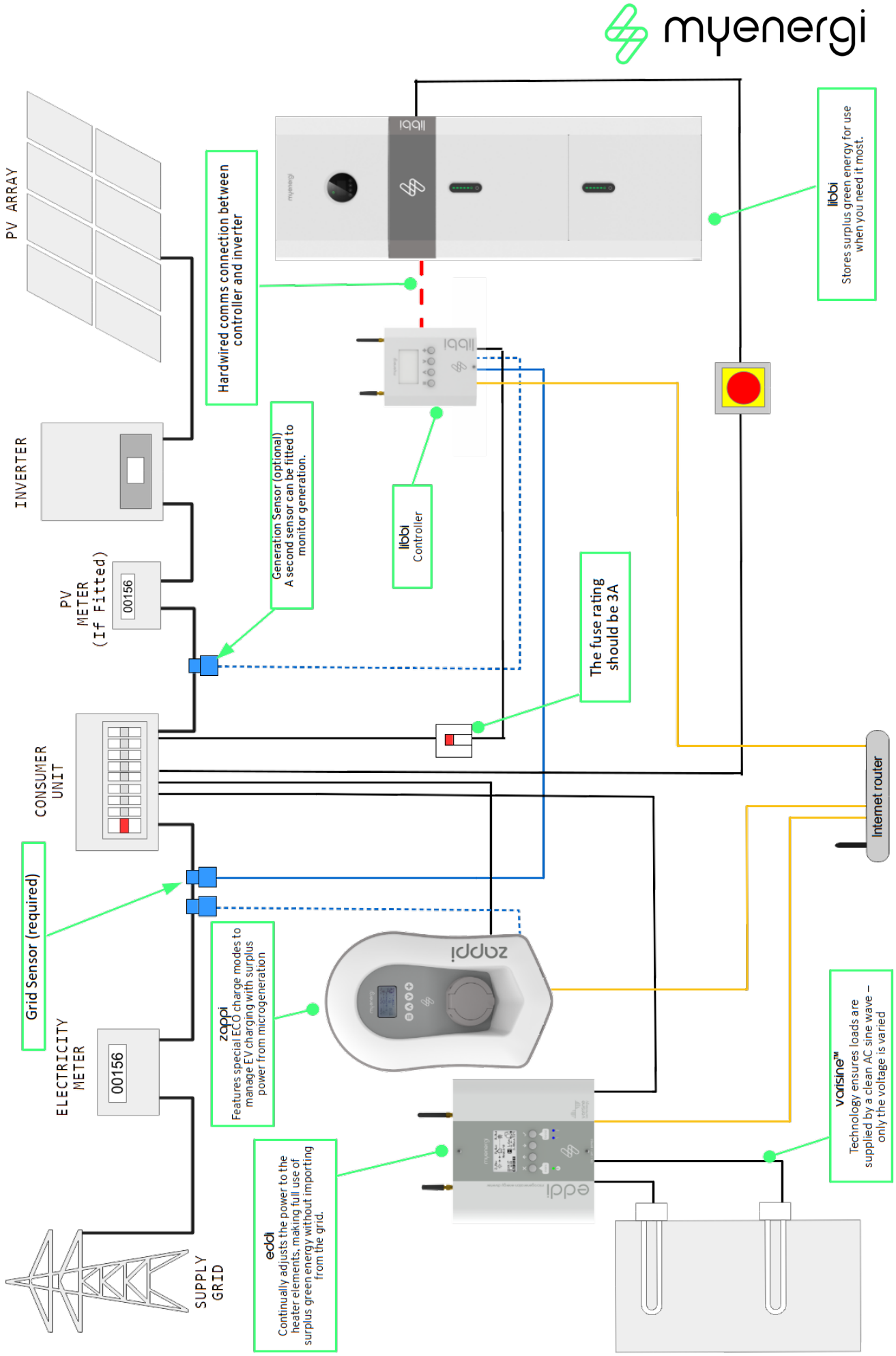
PV ARRAY
INVERTER
PV METER (If Fitted)
00156
CONSUMER UNIT
Grid Sensor (required)
ELECTRICITY METER
00156
SUPPLY GRID
Hardwired comms connection between controller and inverter
Generation Sensor (optional) A second sensor can be fitted to monitor generation.
libbi Controller
libbi
libbi Stores surplus green energy for use when you need it most.
The fuse rating should be 3A
zappi
zappi Features special ECO charge modes to manage EV charging with surplus power from microgeneration
eddi
eddi Continually adjusts the power to the heater elements, making full use of surplus green energy without importing from the grid.
varisine™ Technology ensures loads are supplied by a clean AC sine wave – only the voltage is varied
Internet router

6. Box Contents

Tethered Units

- 1 x zappi unit with EV cable and connector attached
- 1 x Cable wall guard
- 1 or 3 x CT clamps[1]
- 1 x Mounting template
- 1 x Mounting kit for a brick wall

Mounting kit (Tethered units)

- 4 x 50mm Pozi screws
- 4 x Wall mounting plug
- 4 x Sealing washer
- 4 x 12mm Pozi screws (countersunk)

Untethered Units

- 1 x zappi unit
- 1 or 3 x CT clamps[1]
- 1 x Mounting template
- 1 x Mounting kit for a brick wall

Mounting kit (Untethered units)

- 4 x 50mm Pozi screws
- 4 x Wall mounting plug
- 4 x Sealing washer

7. Connectivity

7.1 Wireless Connection

myenergi devices use an 868MHz / 915Mhz wireless link to communicate with each other. Although this is usually more effective at passing through walls than a standard WiFi signal, radio communication can be affected by many factors such as:

- the distance between the devices
- the thickness of any walls that the signal has to pass through
- wall construction and insulation materials
- large metal objects such as washing machines, fridges, sinks and baths
- mirrors
- electronic products such as televisions
- other wireless devices operating on the same radio frequency

Please consider the position of your myenergi devices carefully to ensure that they operate as planned.

Although the devices work in the majority of installations and our technical support team are available to provide help in setting up your system, we cannot guarantee the performance where circumstances beyond our control affect the performance of the wireless link.

If you have any concerns about the wireless performance then we would be pleased to answer your questions, but please consider that if a WiFi signal works OK then there is a very high probability that the myenergi devices will also work without any issues.

7.2 Ethernet or WiFi Connections

zappis with the built-in vHub (identified by product code zappi-2Hxxxx and 22xxxx) are supplied with a built-in Ethernet port (RJ45) and WiFi to connect zappi to the local network (LAN).

All myenergi internet capable devices should be connected to the internet either, via WiFi or a hardwired Ethernet connection. This version of the zappi can also act as the "hub" between all your myenergi devices and the myenergi server. The "hub" device MUST be connected to the internet.

harvi ***can only be connected using a wireless link to the Master device***

When pairing devices, they will use the Ethernet link over wireless, if available.

[1] 1xCT clamp supplied with single phase zappi; 3xCT clamps supplied with three phase zappi

8. Installation

8.1 Mounting

NOTICE
• Care should be taken to maintain the IP rating of the unit. • Ensure grommets and bungs provided are fitted, the O-ring behind the cover is seated correctly and that the incoming power and CT cables are fitted using an appropriate size and type of gland. • zappi must be fixed to a flat vertical surface. • zappi should be installed out of direct sunlight to avoid thermal limiting (for further information, **see 8.7.6 Thermal Limit on page 26.**)

8.1.1 Cable and Gland Requirements

The Cross Sectional Area of the cable used should be between 4mm^2 and 10mm^2 The gland diameter should be a minimum of 16mm and a maximum of 25mm. Generally, a stuffing gland can be used. SWA CW outdoor glands may be used for armoured cable. The size of cable and gland used is the responsibility of the installer and should be determined on an install-by-install basis dependant upon install specifics.

8.1.2 Mounting Instructions

Step 1: Carefully remove fascia from the zappi by pressing the 2 clips located at the bottom of unit inwards whilst pulling the fascia towards you.

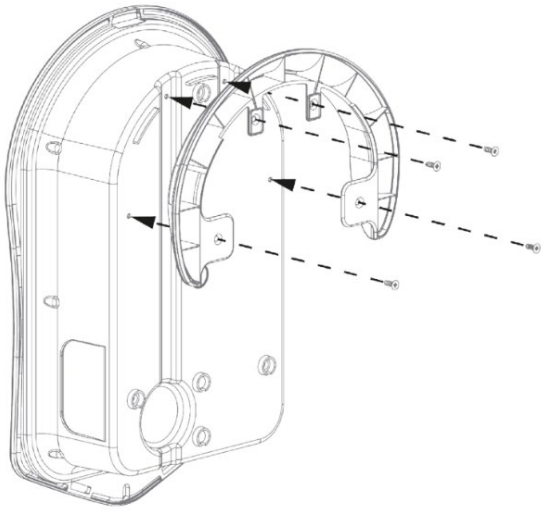

Step 2: If installing a tethered zappi, you must ensure the cable wall guard is fixed to the unit using the 4 screws supplied.
If installing an untethered zappi go to next step.

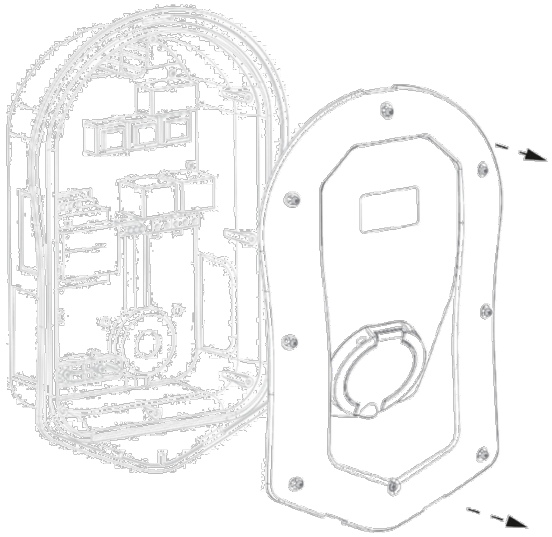

Step 3: Remove all 8 screws from the enclosure and carefully lift away.

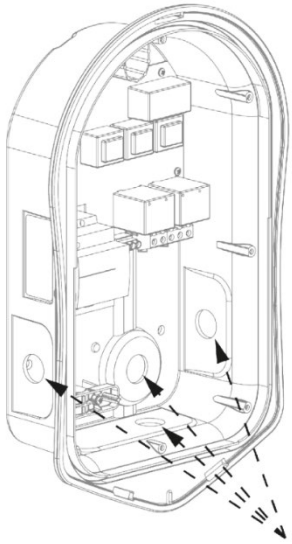

Step 4: There are 4 possible cable entry positions, carefully decide which one you are going to use from the above image.

You will need an IP65 or above rated cable gland.

Carefully drill a hole into the unit to match the size of your cable gland. Attach cable gland ensuring IP rating is met.

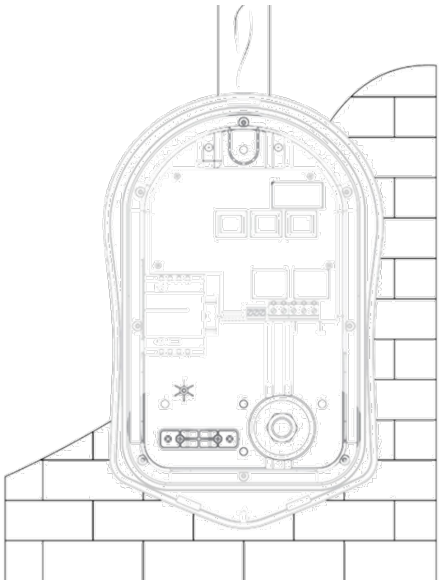

Step 5: Using zappi template mark mounting holes. For fixing to brick, use the top and 2 bottom holes (left/right). Use the 2 vertical holes as well as the top hole if mounting to a stud wall or joist.

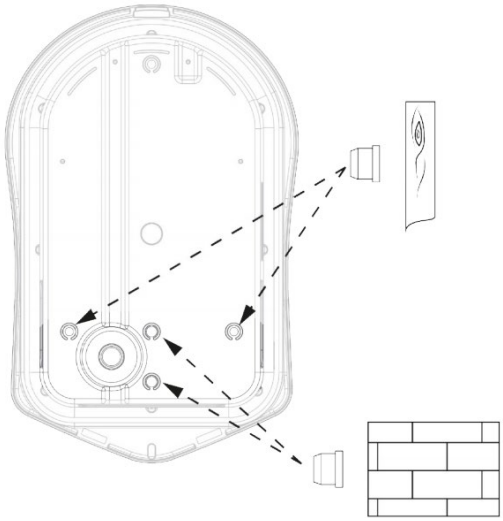

Step 6: To maintain the IP rating of the unit you will need to add bungs (provided) to the unused holes.

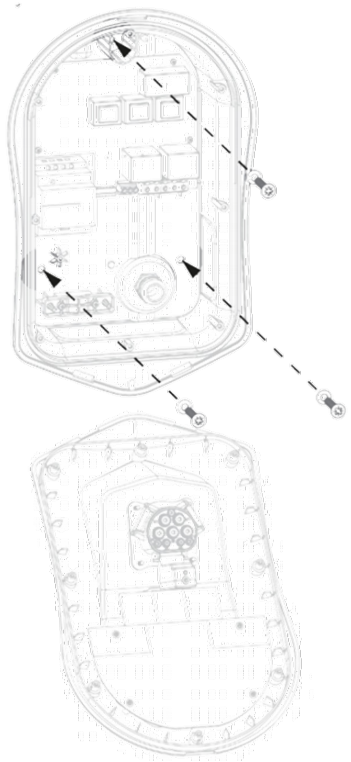

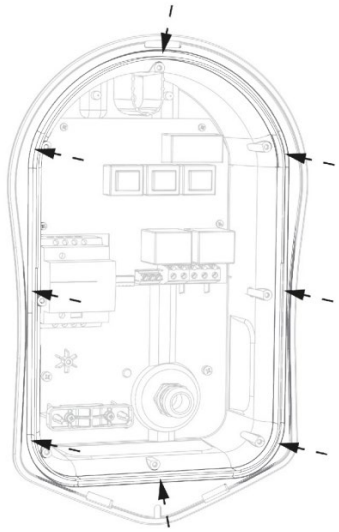

Step 7: Secure the unit to the wall using the fixing kit provided. Ensure the grommets are used to maintain its IP integrity.

Step 8: Ensure O-ring is present and sits neatly into its channel.

NOTICE
If using the rear cable entry, remember to insert the mains cable before mounting to the wall.

8.2 Wiring

⚠ WARNING
ELECTRIC SHOCK – An electric shock can be fatal; electrical connection work may only be carried out by a competent person. The earth conductor must be correctly installed and reliably connected. This device must be equipped with an over-current protection device of maximum 32 Amps (B32).

8.2.1 Cable and Gland Requirements

The Cross Sectional Area of the cable used should be between 4mm^2 and 10mm^2. The gland size should be a minimum of 16mm and a maximum of 25mm. Generally, a stuffing gland can be used. SWA CW outdoor glands may be used for armoured cable. The size of cable and gland used is the responsibility of the installer and should be determined on an install-by-install basis dependant upon install specifics.

8.2.2 Strip Length

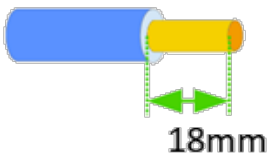

The main terminals are designed to work with wires with a diameter up to 16mm^2.

Insert the mains cable through the installed cable gland (if not already done so). Strip back outer sheath ensuring all cables reach the terminal blocks (leaving a little excess). Strip back all coloured cables approx. 18mm.

If using hard wired CT clamps now is the time to insert these too (we recommend a specialist cable gland that can accommodate multiple cables whilst still maintaining IP integrity, or two separate cable glands to ensure zappi remains sealed).

To insert the wires into the **conductor entry** (lower entry holes) of the terminal block, simply insert the cables into the respective L, N and E holes, by hand. Do not force the cable further than it is willing to go. There is no requirement to open the release lever when inserting cables. The release lever should only be used to release cables upon an uninstall.

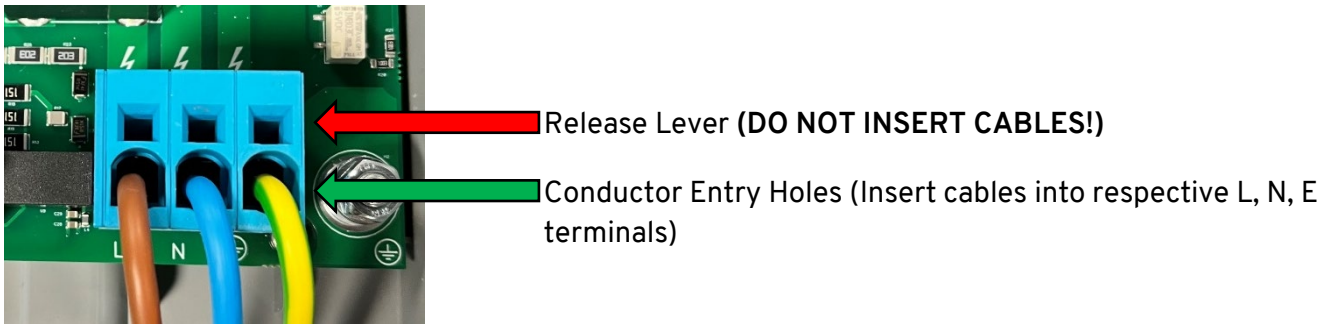

8.2.1 Supply

The single phase zappi should be connected to a 230V nominal AC supply.

The supply final circuit should be protected by an overcurrent device sized to 120% of the Design Current and accordance in accordance with local regulation requirements[2].

zappi incorporates 6mA DC residual circuit protection (RDC-DD) in accordance with EN 62955. Local regulations may require 30mA Type-A RCD protection to be installed upstream[3].

8.2.2 Earthing

The zappi unit must be earthed in accordance with local regulations.

When installed on a PME (TNC-S) electrical system it is necessary to protect the consumer from a potential electric shock that could occur if the combined Neutral and Earth (PEN) conductor on the supply becomes damaged or disconnected.

zappi includes an additional automatic disconnection device which satisfies the requirements of BS7671:2018 Amendment 1:2020 722.411.4.1 (v) (the 18th Edition IET Wiring Regulations).

This protection device

a) monitors the supply to identify if there is a problem with the PEN conductor and
b) disconnects the supply if a situation arises where the end user might suffer an electric shock

This means that the zappi can be installed without the need for an additional earth rod.

[2] For a 32A zappi this would require an overcurrent protective device of the next nominal size (e.g. 40A).

[3] For compliance with Section 722 of BS7671, a typical installation would require dedicate dual-pole (which interrupts both the Live and Neutral) 30mA Type-A RCD protection upstream of the charger. The overcurrent and 30mA RCD protection requirements may be combined into a single device (e.g. a 40A dual-pole Type-A RCBO complying with BS EN 61009-1).

However, if the customer or local regulations require that an earth rod is installed (for instance as part of a TT earthed system) then this should be connected to the dedicated terminal on the main circuit board using a ring terminal (as shown below).

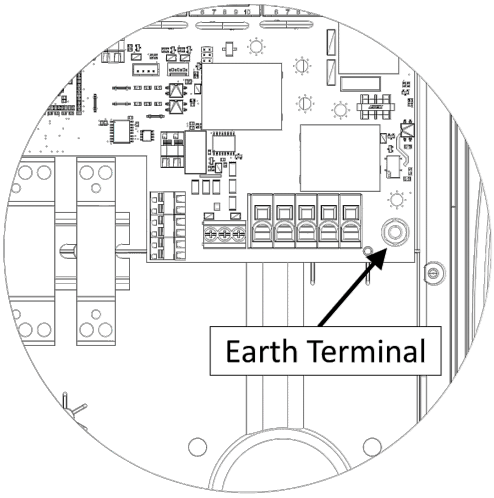

8.2.3 Single Phase Wiring

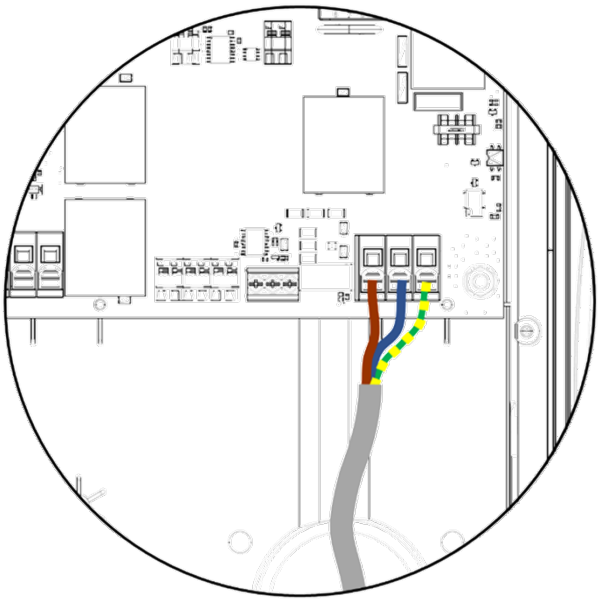

For single-phase installations, without the need for hardwiring an external CT, please follow the above diagram

Earth = Green / Yellow cable
Neutral = Blue cable
Live (L1) = Brown cable

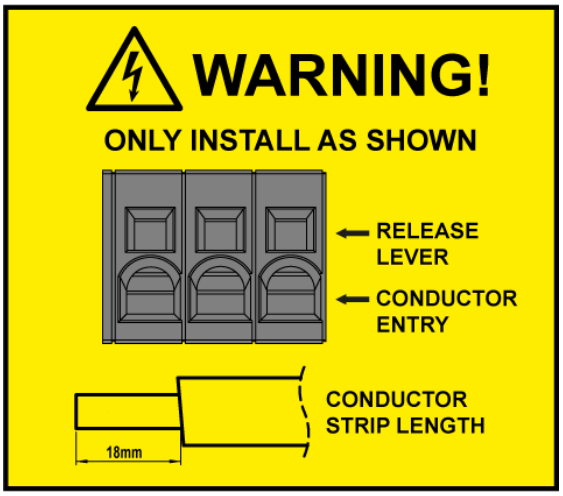

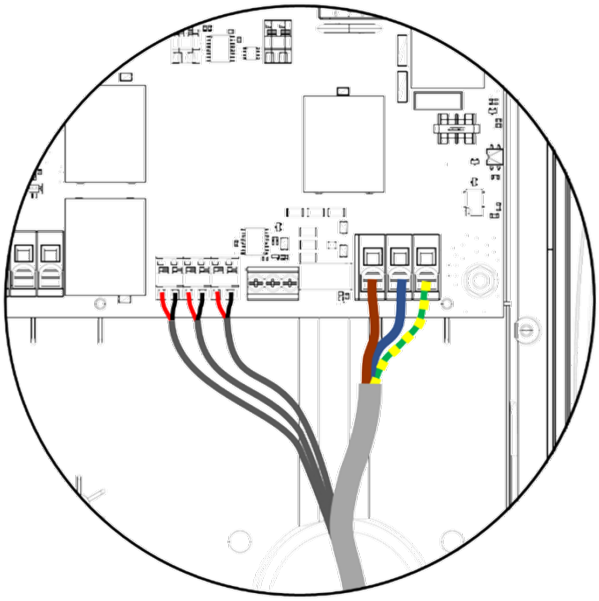

For single phase installations, where 1 or more external/additional CTs are required, please follow the above diagram to connect the CTs. Use the extra CT terminals in the same way if required.

Positive (+) = Red
Negative (-) = Black

For more details on CT installation and connection see CT Sensor Installation

WARNING

It is vitally important that conductors are inserted into the correct terminal entry.
Cables must be stripped back 18mm. Ferrules should be used on stranded wire and crimped. When inserting into the conductor entry, do not open the release lever, simply insert the cable without forcing it further than it naturally would go.
If in doubt please call our Technical Support Team for guidance before installing.

8.2.4 Three Phase Wiring

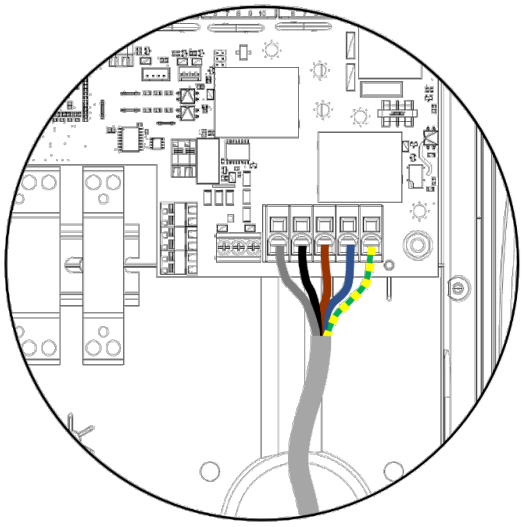

For 3 phase installations, without the need for hardwiring an external CT, please use the above diagram.

Earth = Green / Yellow cable
Neutral = Blue cable
Live (L1) = Brown
Live (L2) = Black
Live (L3) = Grey

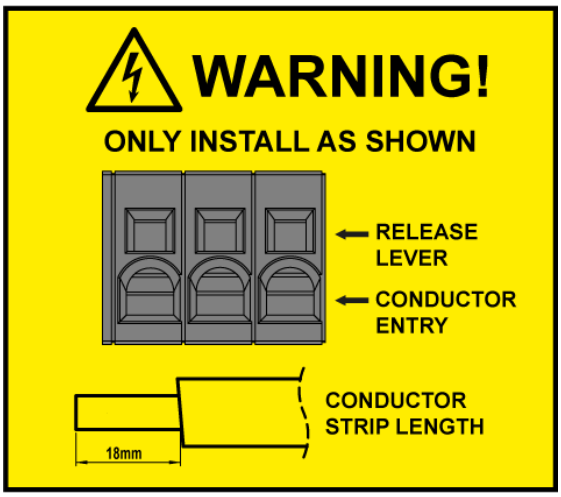

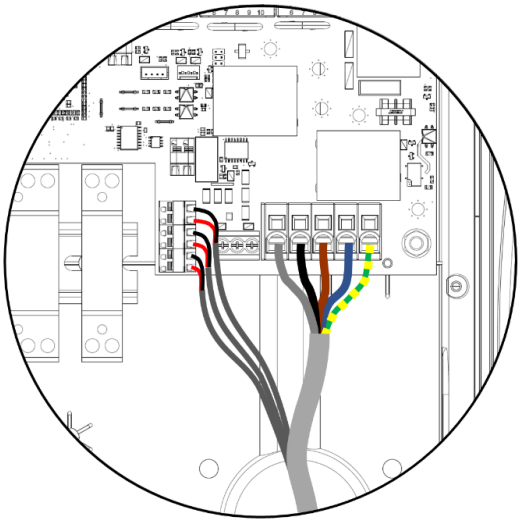

For 3 phase installations, with the need for 1 or more external/additional CTs, please use the above diagram.

Positive (+) = Red
Negative (-) = Black

For more details on CT installation and connection see *CT Sensor Installation*

WARNING

It is vitally important that conductors are inserted into the correct terminal entry.
Cables must be stripped back 18mm. Ferrules should be used on stranded wire and crimped. When inserting into the conductor entry, do not open the release lever, simply insert the cable without forcing it further than it naturally would go.
If in doubt please call our Technical Support Team for guidance before installing.

8.2.5 eSense Input

zappi has an "external Sense" or "eSense" input which can be used with an external input (such as a relay contact or voltage) to

- sense the availability of economy tariff electricity, this can be used to automatically boost the charge when in ECO or ECO+ charging modes.
- force zappi to limit the output or stop the EV charging

NOTICE
The connection to the eSense input will depend on the version of the zappi. • **Serial numbers starting 1xxxxxx** The eSense input to the zappi is designed to work with an AC voltage between 100V and 260V. • **Serial numbers from 2xxxxxxx onwards** A "universal" Sense input is provided. This will work with an external voltage 24-230V AC/DC wired to the terminals marked "24-230V AC/DC in". To use eSense input with a simple "dry" relay contact, a 24V DC supply is provided. The external volt-free relay contact should be wired between the terminals marked "24V out" and "in".

The eSense input is electrically isolated and effectively draws no current so the eSense signal may be connected using a wire with a small cross section. When the eSense input is active the cause the eSense symbol E will be shown on the main screen. There is no need to connect the eSense input if you do not want to use this feature.

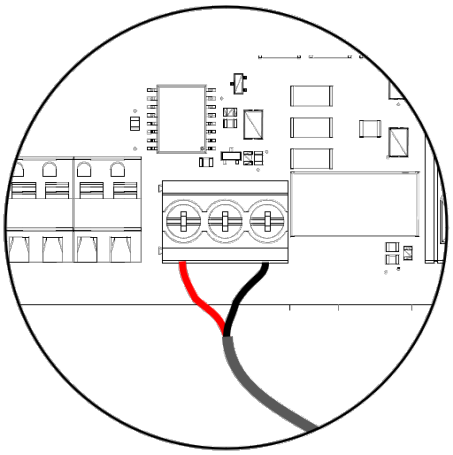

If the eSense input is provided using an external volt-free contact then this must be connected to the outer terminals marked "24V out" and "in"

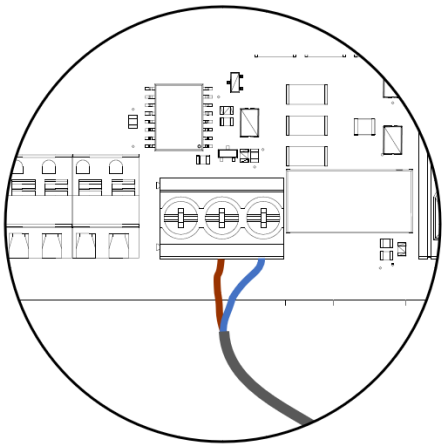

If the eSense signal is provided by using an external voltage this must be connected to the two right hand terminals marked "24-230V AC/DC in"

NOTICE
There is no need to earth the eSense cable

8.2.6 Wiring Overview Diagram

The diagram on the following page gives an overview of the wiring required for a standard installation.

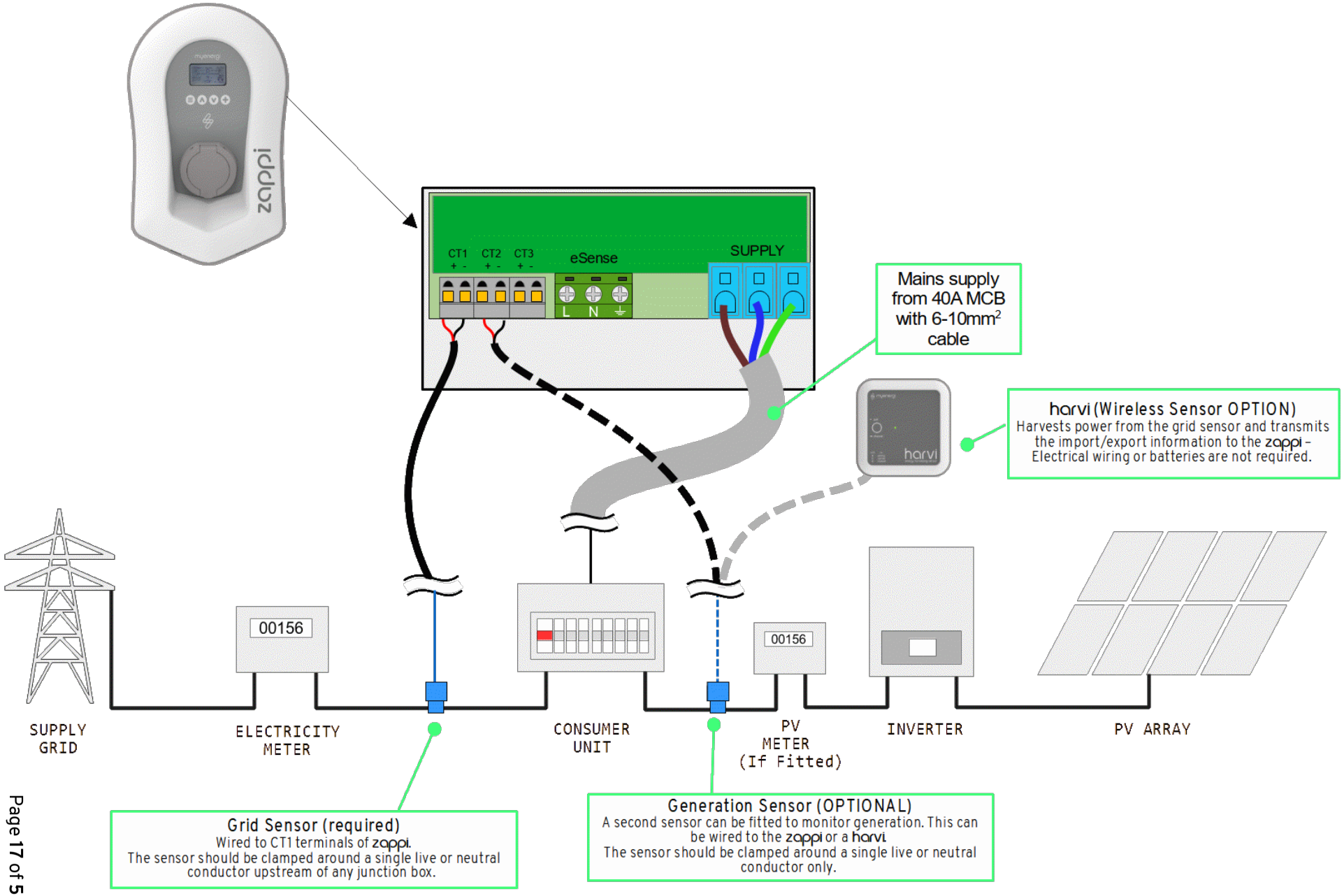
zappi
CT1 CT2 CT3
+ - + - + -
eSense
L N
SUPPLY
Mains supply from 40A MCB with 6-10mm² cable
harvi
harvi (Wireless Sensor OPTION)
Harvests power from the grid sensor and transmits the import/export information to the zappi - Electrical wiring or batteries are not required.
00156
00156
SUPPLY GRID
ELECTRICITY METER
CONSUMER UNIT
PV METER (If Fitted)
INVERTER
PV ARRAY
Grid Sensor (required)
Wired to CT1 terminals of zappi.
The sensor should be clamped around a single live or neutral conductor upstream of any junction box.
Generation Sensor (OPTIONAL)
A second sensor can be fitted to monitor generation. This can be wired to the zappi or a harvi.
The sensor should be clamped around a single live or neutral conductor only.

myenergi

8.3 CT Sensor Installation

Current Transformers (CTs) are used to measure current at various places of the installation. For example, the Grid connection point, the solar/wind inverter, or a static battery system.

Installation of a CT to monitor the Grid connection point is required for ECO modes. Other CTs are optional and can be purchased separately. The number and location of CTs used within an installation will vary according to the devices installed and the user requirements.

CTs can be wired to any myenergi device with CT inputs (e.g. eddi, zappi or harvi). This allows for flexible installation as a CT can be wired to the nearest device. Ideally the grid CTs should be wired to the *master* device.

NOTICE
The harvi device can be used (wirelessly) if it is not practical to connect Generation CT to the zappi.

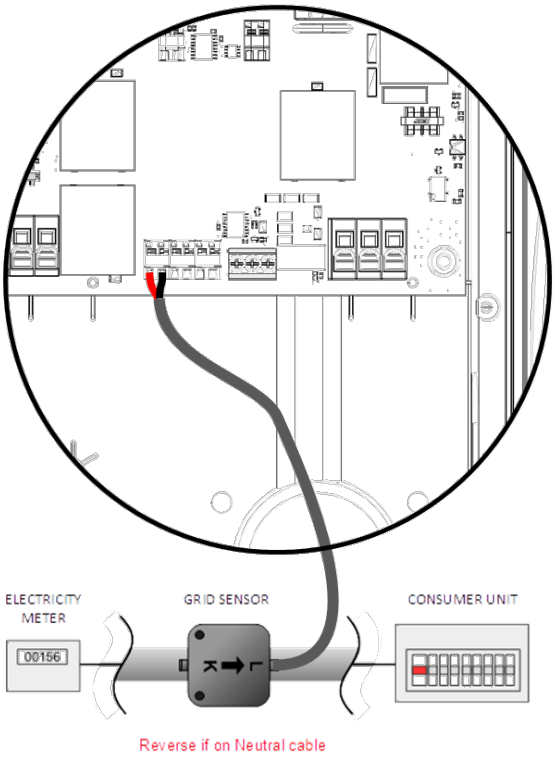

SINGLE PHASE: A CT clamp must be placed around the live meter tail as shown above with the arrow pointing towards the consumer unit.

NOTICE
The clamp can be placed on the neutral tail, however the direction of the arrow shown above will need to be in reversed.

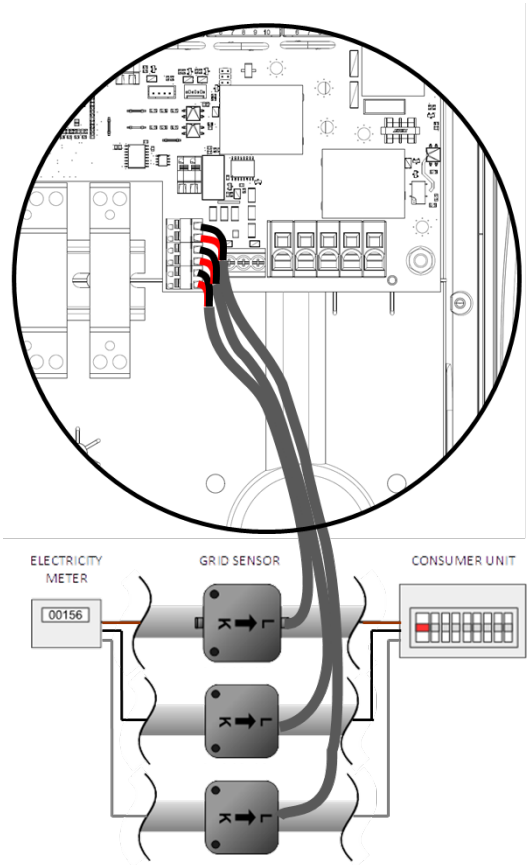

3-PHASE: A CT clamp must be placed around each phase with the arrow pointing towards the consumer unit.

NOTICE
A CT cannot be clipped on to the neutral in a 3-phase system.

Once installed the CTs need to be configured. See *CT Config* for details of how to configure the CTs.

If using a **single-phase** system, the wired CT sensor (**supplied**) ideally needs to be clipped around the live conductor leaving the meter tail with the arrow (located on the side of the CT) pointing towards the consumer unit. It is possible to use the Neutral conductor, however you will need to reverse the direction of the sensor (arrow towards the meter).

If using a **3-phase system**, a CT sensor (**supplied**) needs to be clipped around each live tail.

The positioning of the Grid CT sensor is crucial, please take note of the following when deciding where best to install the sensor:

- The sensor can be connected to any myenergi device with a CT input e.g. the eddi, zappi (wired sensor) or harvi (wireless sensor)
- **ALL** the import and exported power must be 'seen' by the sensor. Ensure that it is installed before ANY junction box or 'Henley Block' (if necessary, the CT can be fitted inside the consumer unit)
- There must be only one Grid CT per-phase for the whole installation. (There can be other CTs but only one at the grid connection point. Also note that CTs for third-party devices do not matter)
- The CTs can be clipped on either the Live or Neutral cable on single-phase systems

  Note: On 3 phase system you can only use the Live tails

- The arrow on the bottom of the CT sensor must be pointing towards the consumer unit (in the direction of grid import) if on the Live cable or reversed if on the Neutral cable (single phase only)
- Ensure the CT is fully closed and clicks shut
- Be sure to wire the CT the correct way round: **black [–], red [+]**. Failure to do so will see the import and export readings swapped

8.3.1 Grid CT

The Grid CT sensor (supplied) needs to be clipped around either the Live or Neutral meter tail of the electricity supply meter. If using the Neutral conductor, reverse the direction of the sensor (so the arrow is reversed). The positioning of the Grid CT sensor is crucial, take note of the following when deciding where best to install the sensor:

- Can be connected to any myenergi device with a CT input e.g. the eddi or zappi (wired sensor) or harvi (wireless sensor).
- ALL of the imported and exported power must be 'seen' by the sensor – be sure to install it upstream of ANY junction box or 'Henley Block' (the CT can be fitted inside the consumer unit).
- There must be only one Grid CT per-phase for the whole installation. (There can be other CTs but only one at the grid connection point, also note CTs for third-party devices do not matter).
- The CT should be on the Live or Neutral cable.
- The arrow on the bottom of the CT sensor must be pointing towards the consumer unit (in the direction of grid import) if on the Live cable, or reversed if on the Neutral cable.
- Ensure the CT is fully closed and clicks shut.
- Be sure to wire the CT the correct way round; black [–], red [+] otherwise import and export readings will be swapped.

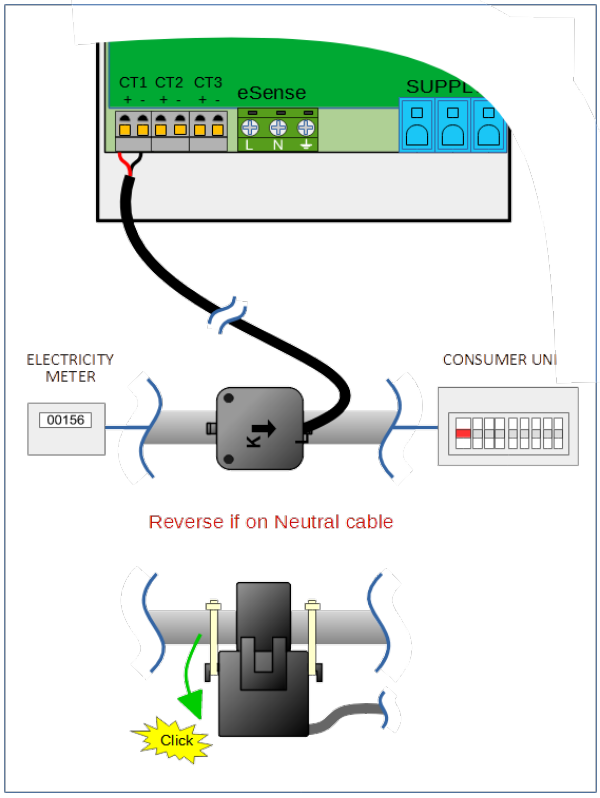

8.3.2 Additional CTs

There is an option to add other CT sensors (available separately) for monitoring the generation or other appliances such as battery systems or general loads. Installing a CT for the generator (PV system) will allow the main screen to show the generated power and the total power consumption of the all the other appliances in the property.

CTs can also be used to limit the power drawn from the supply:

- Additional CTs can be connected to any myenergi device with a CT input that is linked to the network.
- The arrow on the bottom of the sensor must be pointing in the direction of normal power flow (e.g. away from the PV inverter) if on the Live cable or reversed if on the Neutral cable.
- Ensure the sensor is fully closed and clicks shut.
- Be sure to wire the CT the correct way round; black [–], red [+]

8.3.3 Extending CT Sensor Cable

If there is a need to extend the CT sensor cable, twisted-pair cable like CAT5 or telephone cable must be used (only use one pair).

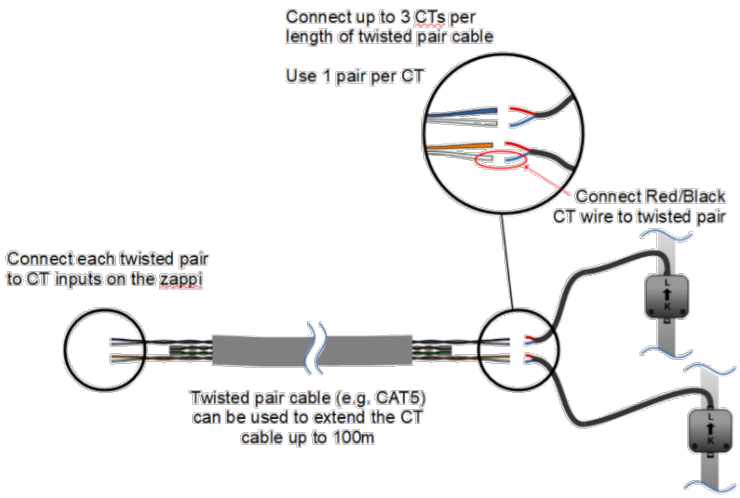

NOTICE

DO NOT use mains cable, bell wire or speaker cable. It is important to use only twisted-pair cable to maintain signal integrity. The cable can be extended up to 100m.

8.3.4 Wireless CT Sensor (Optional accessory)

In some cases it can be difficult or impractical to install a wired sensor. For example, it may be the case that the zappi unit needs to be connected to a sub-board, rather than main consumer unit and two consumer units are in different buildings.

The solution is to install harvi – a clever little device that enables the zappi product to be installed without using wired CT sensors for measuring generation power; instead the CT sensor is connected to harvi.

The harvi does not need batteries or a power supply – the energy from the sensor is harvested and used to transmit the measurement signal to the eddi. This means batteries or electrical wiring are eliminated!

Up to 3 CT sensors may be used with harvi and it also supports 3-phase systems if three sensors are connected.

Refer to the harvi installation guide for details on installing and configuring harvi for your system.

8.3.5 CT Golden Rules – Grid CT

- Only ONE Grid CT per phase (check for only one ~ symbol in Linked Devices Info).
- Located to 'see' ALL import and ALL export current (i.e. always upstream of any junction box).
- Arrow pointing in direction of import (e.g. towards consumer unit if on Live cable).
- Must be on the same phase as the Master myenergi device.

8.3.6 All other CTs

- Arrow should point towards the consumer unit.

8.3.7 3-phase harvi CTs

- When using harvi in 3-phase mode, the CT inputs correspond to the phase number (e.g. CT1 = Phase 1). This helps to avoid phase shifting / phase misalignment.

8.3.8 CT Can do's

- Can be wired to ANY myenergi device in the network.
- harvi can be used to make ANY CT wireless[4].
- Cable can be extended up to 100m (must use twisted-pair cable e.g. one pair of CAT5).
- Cable can be shortened.
- Can be clipped around two or more conductors feeding appliances of the same type (e.g. two Live cables from two inverters that are on the same phase).
- Can be in close proximity to other CTs.
- Wires can be swapped around in device to reverse the direction of the readings (e.g. change import to export).
- Can be grouped with other CTs of the same type so that the power reading is summed (e.g. east and west solar Generation).
- Can be used on the Neutral conductor (direction of arrow or wires must be reversed).
- Can be set to None if you want to exclude the reading.

8.4 Ethernet link

If you are installing a hard wired link to the router, insert the Ethernet cable into the RJ45 Port before progressing to 8.5

Ensure you connect the remaining end of the Ethernet into the home router.

[4] Although CT's connected to a harvi cannot be used with Monitor Group option.

8.5 Fitting the Cover

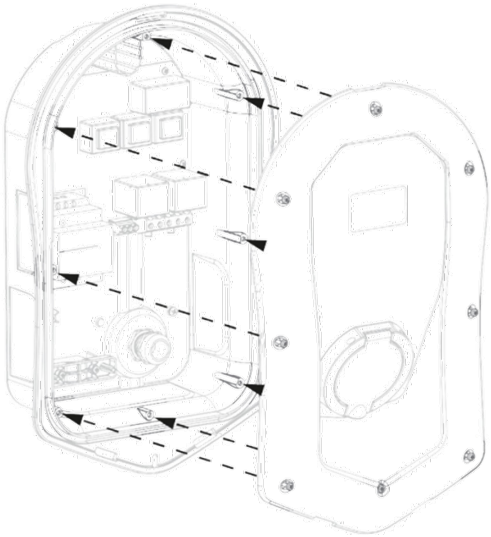

Step 1: Offer cover to the enclosure, ensuring all cables are neatly secured inside the unit.

- **Take particular care that the ribbon cable is not trapped between the cover and the case**

Ensure O-ring (seal) is firmly placed into the channel and secure the cover to the unit using the 8 screws that were removed earlier (Torque setting = 1.2Nm).

Step 2: Add fascia to the enclosure cover of the zappi as shown.

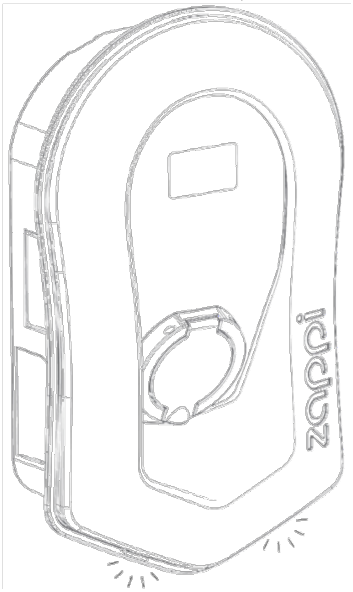

Step 3: Ensure the 2 tabs at the bottom of the fascia click to indicate its securely fixed in place.

Step 4: zappi is now ready for operation.

8.6 Advanced Installation Options

8.6.1 Load Balancing / Current Limiting / Load Curtailment

CTs can also be used to limit the current drawn by myenergi devices to avoid overloading circuits; this is referred to as load balancing or load curtailment. There are four different ways to limit current and they can be used alone or combined for more complex situations. See the table below:

Function	Operation	Example
Device Limit	Sets a maximum current that can be drawn by the device (e.g. zappi). The current will not be exceeded even during Boost or Fast charge.	A zappi is wired to a 20A supply (rather than 32A). The maximum current drawn will not exceed the set limit (e.g. 20A)
Grid Limit	Sets the limit that can be drawn from the grid connection (i.e. the maximum import current). The zappi and any other linked myenergi device, will limit the current they draw if there is a danger of exceeding the set Grid Limit.	A property may have a grid supply limit of 65A. Several appliances are on, so the property is consuming 12kW (52A). The user wants to charge in FAST mode. Without the Grid Limit set, the total consumption would exceed the allowed import current and trip the supply or blow a fuse. However, with a Grid Limit setting of 60A, zappi would temporarily limit the charging current to 8A (about 1.8kW) and the maximum allowed import current would not be exceeded.
Group Limit (internal CT)	Sets the combined current limit for several myenergi devices.	A property has a large PV array, a swimming pool and two zappis. The supply to the zappis is only rated at 40A so to be safe a Group Limit of 40A is set.
Group Limit (with external CT)	Sets the combined current limit for several myenergi devices that are sharing a supply with another large appliance.	A zappi is installed in a garage which also has a washer and a dryer (2.5kW each). The garage has a supply of 32A coming from the main consumer unit in the house. If all appliances were on together and no limit had been set the total current would exceed the maximum supply current. By setting the Group Limit to 32A an overload will be avoided.

8.6.2 Three-Phase Systems

If the installation has a three-phase supply, you can use the 3 CT connectors either directly connected to the zappi (hard wired) or a harvi device (wireless – optional). We recommend you use one CT per phase; this will allow the zappi to show the total grid import and export figures rather than just one of the phases.

If all three phases are monitored then it is also possible to net the export power across phases, to do this, enable Net Phases in the Supply Grid menu see *Supply Grid – Net Phases.* This allows the zappi to use surplus power from any phase and not just the phase which the zappi is installed on. However, you must be sure that the electricity is metered in such a way as to allow this.

For a three phase zappi, Net Phases should be turned on.

8.6.3 Battery Storage Systems

AC Coupled

Where there is an AC coupled battery storage system, there can be a conflict as both the storage system and the zappi are competing to consume the surplus energy. Whilst this is not necessarily an issue, the results can be somewhat unpredictable.

There is the option to add an additional CT sensor to monitor the battery storage. This will give control as to which device has priority. The additional CT sensor should be wired to one of the CT terminals in the zappi or harvi device (if wireless measurement is required). This CT should be clipped around the live cable of the battery inverter with the arrow on the CT pointing away from the battery and towards the consumer unit/fuse board.

During the setup process it will be necessary to change the setting for the appropriate CT to AC Battery; refer to *CT Config*. Also refer to *Supply Grid – Network Settings – Battery* for information on setting the 'priority' of battery systems.

DC Coupled / Hybrid

Battery systems that charge directly from the solar array and cannot charge from AC are usually referred to as being DC coupled or Hybrid. This type of battery system uses the solar PV inverter to provide power from the batteries, thus it is not possible to differentiate between solar and battery power when using a CT to measure the AC current from the inverter.

Because of this limitation, there are less options for managing the surplus power with this type of battery system. It is usually possible to give priority to the battery by setting an Export Margin in the zappi. A setting of 50W or 100W is recommended. The Export Margin setting is found in the Advanced Settings/Supply Grid menu.

Third-Party Diverters

Some properties have a third-party energy diverter installed and you may want the zappi to take priority (when consuming surplus power) over the diverter. This is possible by installing an extra CT to monitor the diverter. The CT should be clipped around the Live cable of the supply feeding the diverter. The arrow on the CT should be pointing away from the diverter (towards the consumer unit). Wire the CT to the nearest myenergi device or use a harvi if a wireless connection is needed.

Configure the CT Type as Storage Only. See CT Config for details of how to configure CTs.

Voltage Optimisers

If there is a voltage optimiser (VO) installed in the property, the CT sensor and the zappi must both be on the same side of the VO; either the incoming grid supply or the optimised supply.

8.7 Built-in Protection

zappi has a number of protection features built into the device to make it safe and simple to install.

8.7.1 Loss of PEN Conductor

The Protective Neutral and Earth (PEN) conductor refers to part of the electricity cable to the property. If this conductor is damaged there is a danger that the chassis of the electric vehicle being charged will become "live" and cause an electric shock. BS7671:2018 Amendment 1:2020 part 722.411.4.1 requires that extra protection is provided to prevent an electric shock – either by fitting an extra earth electrode or through a device which detects the fault and disconnects the supply.

zappi has this protection built-in[5] and will disconnect the output if it detects a problem with the PEN conductor or detects that there may be any electric current flowing through the chassis of the EV. This built-in protection means that there is no need to install an earth electrode with the zappi.

If zappi detects a problem with the PEN conductor then the display will show PEN Fault!

To reset the zappi, check the continuity of the earth cable and then press the button for three seconds.

8.7.2 Loss of Protective Earth

zappi can measure the continuity of the protective earth conductor (the earth wire) on the supply cable. If the earth is disconnected or has a high impedance, then zappi will trip and the display will show PE not connected!

To reset the zappi, make sure that the fault has been removed and then press the button for three seconds.

8.7.3 Welded Contact

zappi includes protection to make sure that the supply to an EV is disconnected if there is a problem with the circuit breaker. This includes a situation where the contacts on the breaker are welded together. This is a specific requirement of the Renault "Z.E. Ready" and ASEFA "EV Ready" standards (e.g. requirement for Nissan).

If zappi detects a problem with a welded contact, then the display will show RLY WELDED!

If this happens and the fault cannot be reset by pressing the button for three seconds, then please contact myenergi technical support at support@myenergi.com

8.7.4 Over-current

If there is a problem with the equipment on the EV which charges the vehicle's battery, too much current may be drawn from the supply. If this happens, zappi cannot control the charge rate as expected and it could lead to problems with overheating or tripping the main circuit breaker to the zappi.

zappi provides additional protection in accordance with the EV Ready standard by opening its built-in contactor and isolating the EV if it detects that the vehicle is drawing more than 125% of the maximum current communicated to it by the zappi.

If zappi detects an over-current, then the display will show Over Current!

To reset the zappi, make sure that the fault has been removed and then press the button for three seconds.

[5] Patent Reference GB3577354

8.7.5 Over and Under-voltage

zappi will also isolate the supply to the EV if it detects a problem with the electricity supply voltage. The nominal supply voltage is 230V but zappi will trip the output if the measured voltage is more than 12% above or below this level for five seconds.

The zappi display will show Over Voltage! or Under Voltage!

zappi, will reset automatically once the voltage returns to the acceptable range (nominally 230V +/-10%)

8.7.6 Thermal Limit

zappi also includes protection against overheating. If zappi gets too warm it will attempt to reduce the current being drawn by reducing the EV charge rate. If this happens you will see the icon on the main display.

If the problem continues and the zappi's internal temperature continues to rise, then it will trip the output to the EV, and the display will show **Overheating**!

zappi will resume normal operation once the temperature drops.

9. Set-up

After completing and checking the wiring of the supply and the current transformers (CTs), switch on the zappi via the circuit breaker. zappi will start-up and the main screen will be presented after a few seconds.

If zappi has been installed alongside another zappi unit or another myenergi device, refer to Linking Devices section for guidance on pairing devices. Also refer to the instruction documentation for the other devices.

Upon start up there will be a wizard where you will be taken through a number of screens. Please ensure you answer the questions correctly for a seamless set-up.

The screens will vary depending on install location and install date. Ensure to read the relevant section listed below:

- **For installs in England, Scotland or Wales *on or after* 30th December 2022, see section 9.1**
- **For installs in England, Scotland or Wales *before* 30th December 2022, see section 9.2**
- **For installs outside of Great Britain, see section 9.3**

9.1 Installs in England, Scotland & Wales on or after 30th December 2022

Installs in England, Scotland and Wales are required to be compliant with the UK Smart (Charge points) Regulations. After 30th December 2022 zappi is required to have tamper detection.

For further information on the Smart Regulations; June and December 2022 iterations and retrofit tamper board kits please refer to Appendices A, B and C at the back of this manual.

Step 1: Before you begin, ensure that a tamper board is fitted to the device by looking for the words "Tamper Detection" on the rating plate.

Step 2: Select "Yes" as Smart Regulations apply.

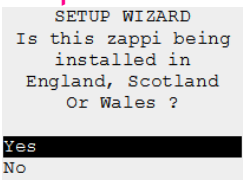

Step 3: If this is your first myenergi device select "1st Device Installed". If you are adding this zappi to an existing myenergi eco-system, select "Additional Device".

Step 4: Review settings and press + to confirm.

Note:
Selecting "1st device installed" will configure your zappi as Master and enable vHub.

Selecting "Additional device" will configure zappi as Slave and disable vHub.

```
SETUP WIZARD

Please Select
Is this device…?

1st device installed
Additional device
```

```
REVIEW SETTINGS

This Device is Master
vHub Enabled

Press + to confirm
Press ≡ to cancel
```

```
SETUP WIZARD

Please Select
Is this device…?

1st device installed
Additional device
```

```
REVIEW SETTINGS

This Device is Slave
vHub Disabled

Press + to confirm
Press ≡ to cancel
```

Step 5: If you are connecting to the internet via WiFi please **skip ahead to Step 7**
If you inserted an Ethernet cable earlier (section 9.4) zappi will detect this and attempt connect to the home router automatically.

```
ETHERNET CONNECTED

Checking LAN…
```

Step 6: Once zappi has secured an internet connection via Ethernet the below screen will show.

Skip ahead to Step 14 for next steps.

```
ETHERNET CONNECTED

Connected to the
internet

IP:  192.168.90.68

Press + to continue
```

Step 7: The following steps are for zappi's connecting to the internet via WiFi. If you have already made a hard wired Ethernet connection **jump ahead to step 14.**
zappi will attempt to identify WiFi details. During this attempt you will see the first screen below. Once established the second screen will show.

```
WIFI SETUP
Busy:10s
```

```
WIFI SETUP
Connect to the
hotspot below to
setup
SSID: myenergi XXXX
P/W:  a8jdl0qHB4p
Status:  Disconnected
Press X to skip
```

NOTICE
Make a note of the SSID and Password (P/W) now, for use in the next steps.

NOTICE
If the screen above is ***skipped***, please see section 9.4 for details on retrospective WiFi set-up.

Step 8: Connect your smartphone or computer to the myenergi access point by entering your phone or computer WiFi Settings and searching for the network displayed with the same name as the SSID you noted down above. Once displayed, select the network to connect.

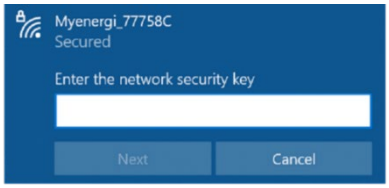

Step 9: You will be prompted for a password. Enter the password displayed on the zappi screen that you noted down at step 7.

Step 10: You will now be prompted to create a new password to protect the WiFi settings from being changed by anyone else. The new password must be at least 8 characters long and consist of a combination of lowercase and uppercase letters and digits.

NOTICE
If page doesn't load, type 192.168.4.1 into your web browser of mobile phone browser to enter WiFi setup screen.

Step 11: Wait 5 seconds for your password to change and the webpage to reload.

Step 12: Once connected, you will be directed to the webpage below where you will need to select your home WiFi network from the list in the "Detected Networks" box and type in your home WiFi's password to connect to your router.

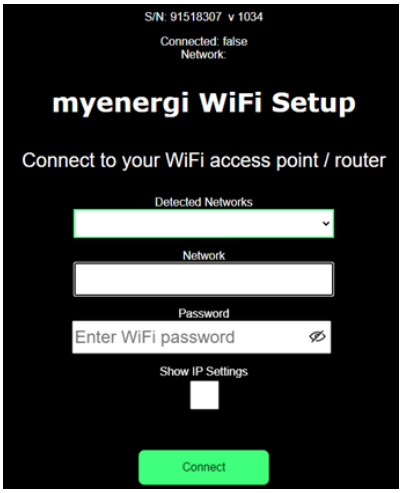

NOTICE
In most cases you should leave the "Show IP Settings" option unticked. However, if you want to give your zappi a fixed IP address then tick the "Show IP Settings" box and fill in the extra information required.

Please be patient. It could take up to 15 seconds for the connection to take place.

Step 13: Once connected, you will see this screen on your zappi display. Press + to continue.

```
WIFI Connected

Connected to the
internet

IP:  192.168.90.68

Press + to continue
```

Step 14: By this step zappi should now be internet connected either via WiFi or hard wired Ethernet. zappi will now check for firmware updates. Please be patient.
If no Firmware updates are available **jump to Step 17.**

```
DOWNLOAD FIRMWARE


Status: New Available
3562S4228 → 3562S4229


Press + to install
```

Step 15: If Firmware updates are available zappi will proceed to download these. Showing the progress percentage on the display.

```
  DOWNLOAD FIRMWARE


Status:    Downloading
Image:       3562S4229
Progress:        52.4%

     Download Section
```

Step 16: Once download reaches 100% zappi will proceed to install updates.
zappi may reboot during this process.

```
 DOWNLOAD FIRMWARE

  Installing new
updates. zappi may
reboot during this
     process

  Progress: 60%
```

Step 17: If zappi has no updates available or after updates have been installed this screen will show on your zappi display informing you that firmware is up to date and giving you the firmware version number.

```
  DOWNLOAD FIRMWARE


Status:     Up to date
3562S4229 → 3562S4229


 Press + to finish
```

NOTICE
If zappi has been installed alongside another myenergi device, refer to Linking Devices section for guidance on pairing. Also refer to the instruction documentation for the other devices.

Step 18: Jump to “9.5 Testing”.

9.2 Installs in England, Scotland & Wales before 30th December 2022

Before following the steps below, check if your zappi has built-in tamper detection.

If no tamper detection is present, and it is before 30th December 2022 you do NOT need to retrofit a tamper board and you may follow the below steps for set-up. If no tamper detection is present and it is after 30th December 2022, you cannot install the zappi legally until you have fitted a Tamper Board. Contact our Sales Team for further information on ordering Tamper Board Retrofit Kits.

Step 1: Select "Yes" as Smart charging Regulations apply.

```
SETUP WIZARD
Is this zappi being
installed in
England, Scotland
Or Wales ?

Yes
No
```

Step 2: Read the screen carefully and check the date of the install. If it is on or after the 30/12/2022 select "No" and **carry on to step 3.**
If the install is taking place before 30/12/2022 OR it was previously installed prior to 30/12/2022 select "Yes" and **jump to step 4.**

```
SETUP WIZARD
Was the initial
installation of this
unit performed
before 30/12/22 ?

Yes
No
```

Step 3: You answered "No" to the previous question which means zappi is required to have a tamper switch before install. Abandon installation until rectified ensuring to leave the zappi in a safe state. Once tamper board has been fitted you may begin set-up again following section 9.1 of this document.

```
WARNING
No tamper device
detected. Such a
device must be
installed to conform
to the latest regs

Press ≡ to cancel
```

Step 4: Review settings and press + to confirm.

Note:
Selecting "1st device installed" will configure your zappi as Master and enable vHub.

Selecting "Additional device" will configure zappi as Slave and disable vHub.

```
SETUP WIZARD

Please Select
Is this device…?

1st device installed
Additional device
```

```
REVIEW SETTINGS

This Device is Master
vHub Enabled

Press + to confirm
Press ≡ to cancel
```

```
SETUP WIZARD

Please Select
Is this device…?

1st device installed
Additional device
```

```
REVIEW SETTINGS

This Device is Slave
vHub Disabled

Press + to confirm
Press ≡ to cancel
```

Step 5: If you are connecting to the internet via WiFi please **skip ahead to Step 7**
If you inserted an Ethernet cable earlier (section 9.4) zappi will detect this and attempt connect to the home router automatically.

```
ETHERNET CONNECTED

Checking LAN…
```

Step 6: Once zappi has secured an internet connection via Ethernet the below screen will show.

Skip ahead to Step 14 for next steps.

```
ETHERNET CONNECTED

Connected to the
internet

IP:  192.168.90.68

Press + to continue
```

Step 7: The following steps are for zappi's connecting to the internet via WiFi. If you have already made a hard wired Ethernet connection **jump ahead to step 14.**
Zappi will attempt to identify WiFi details. During this attempt you will see the first screen below. Once established the second screen will show.

```
     WIFI SETUP
Busy:10s
```

```
     WIFI SETUP
   Connect to the
 hotspot below to
       setup
SSID: myenergi XXXX
P/W:  a8jdl0qHB4p
Status:  Disconnected
  Press X to skip
```

NOTICE
Make a note of the SSID and Password (P/W) now, for use in the next steps.

NOTICE
If the step above is skipped, please see section 9.4 for details on retrospective WiFi set-up.

Step 8: Connect your smartphone or computer to the myenergi access point by entering your phone or computer WiFi Settings and searching for the network displayed with the same name as the SSID you noted down above. Once displayed, select the network to connect.

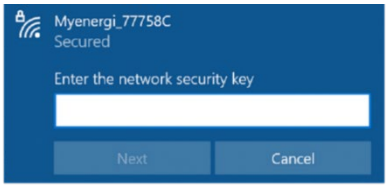

Step 9: You will be prompted for a password. Enter the password displayed on the zappi screen that you noted down at step 7.

Step 10: You will now be prompted to create a new password to protect the WiFi settings from being changed by anyone else. The new password must be at least 8 characters long and consist of a combination of lowercase and uppercase letters and digits.

NOTICE
If page doesn't load, type 192.168.4.1 into your web browser of mobile phone browser to enter WiFi setup screen.

Step 11: Wait 5 seconds for your password to change and the webpage to reload.

Step 12: Once connected, you will be directed to the webpage below where you will need to select your home WiFi network from the list in the "Detected Networks" box and type in your home WiFi's password to connect to your router.

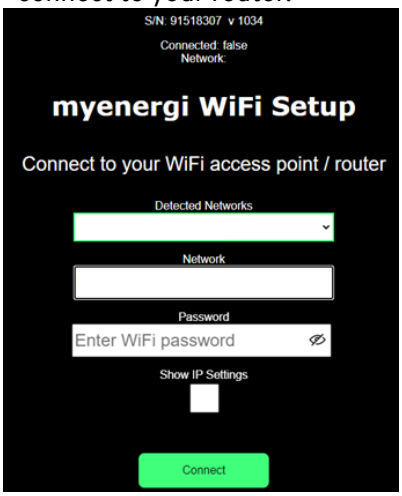

NOTICE

In most cases you should leave the "Show IP Settings" option unticked. However, if you want to give your zappi a fixed IP address then tick the "Show IP Settings" box and fill in the extra information required.

NOTICE

Please be patient. It could take up to 15 seconds for the connection to take place.

Step 13: Once connected, you will see this screen on your zappi display. Press + to continue.

```
WIFI Connected

Connected to the
internet

IP:  192.168.90.68

Press + to continue
```

Step 14: By this step zappi should now be internet connected either via WiFi or hard wired Ethernet.
zappi will now check for firmware updates. Please be patient.
If no Firmware updates are available **jump to Step 17.**

```
DOWNLOAD FIRMWARE


Status: New Available
3562S4228 → 3562S4229


Press + to install
```

Step 15: If Firmware updates are available zappi will proceed to download these. Showing the progress percentage on the display.

```
DOWNLOAD FIRMWARE


Status:   Downloading
Image:      3562S4229
Progress:        52.4%

Download Section
```

Step 16: Once download reaches 100% zappi will proceed to install updates.
zappi may reboot during this process.

```
FIRMWARE UPDATE

Installing new
updates. zappi may
reboot during this
process

Progress: 60%
```

Step 17: If zappi has no updates available or after updates have been installed this screen will show on your zappi display informing you that firmware is up to date and giving you the firmware version number.

```
DOWNLOAD FIRMWARE


Status:    Up to date
3562S4229 → 3562S4229


Press + to finish
```

NOTICE

If zappi has been installed alongside another myenergi device, refer to Linking Devices section for guidance on pairing. Also refer to the instruction documentation for the other devices.

Step 18: Jump to "9.5 Testing".

9.3 Installs outside of Great Britain

Before following the steps below, please ensure this zappi is not being installed in England, Scotland or Wales. If being installed in any of these countries, Smart Regulations must apply and you will need to follow either 9.1or 9.2 for Set-up instructions.

Step 1: Select "No" as Smart Regulations don't apply.

```
SETUP WIZARD
Is this zappi being
installed in
England, Scotland
Or Wales ?

Yes
No
```

Step 2: Select timezone relevant to installation location.

```
SETUP WIZARD

Select timezone

DST:  Britain GMT/BST

Next step…
```

Step 3: Review settings and press + to confirm.

Note:
Selecting "1st device installed" will configure your zappi as Master and enable vHub.

Selecting "Additional device" will configure zappi as Slave and disable vHub.

```
SETUP WIZARD

Please Select
Is this device…?

1st device installed
Additional device
```

```
REVIEW SETTINGS

This Device is Master
vHub Enabled

Press + to confirm
Press ≡ to cancel
```

```
SETUP WIZARD

Please Select
Is this device…?

1st device installed
Additional device
```

```
REVIEW SETTINGS

This Device is Slave
vHub Disabled

Press + to confirm
Press ≡ to cancel
```

Step 4: If you are connecting to the internet via WiFi please **skip ahead to Step 6**
If you inserted an Ethernet cable earlier (section 8.4) zappi will detect this and attempt connect to the home router automatically.

```
ETHERNET CONNECTED

Checking LAN…
```

Step 5: Once zappi has secured an internet connection via Ethernet the below screen will show.

Skip ahead to Step 13 for next steps.

```
ETHERNET CONNECTED

Connected to the
internet

IP:  192.168.90.68

Press + to continue
```

Step 6: The following steps are for zappi's connecting to the internet via WiFi. If you have already made a hard wired Ethernet connection **jump ahead to step 13.**
zappi will attempt to identify WiFi details. During this attempt you will see the first screen below. Once established the second screen will show.

```
WIFI SETUP
Busy:10s
```

```
WIFI SETUP
Connect to the
hotspot below to
setup
SSID: myenergi XXXX
P/W:  a8jdl0qHB4p
Status:  Disconnected
Press X to skip
```

NOTICE
Make a note of the SSID and Password (P/W) now, for use in the next steps.

NOTICE
If the step above is skipped, please see section 9.4 for details on retrospective WiFi set-up.

Step 7: Connect your smartphone or computer to the myenergi access point by entering your phone or computer WiFi Settings and searching for the network displayed with the same name as the SSID you noted down above. Once displayed, select the network to connect.

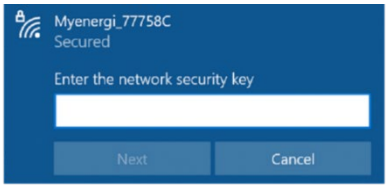

Step 8: You will be prompted for a password. Enter the password displayed on the zappi screen that you noted down at step 6.

Step 9: You will now be prompted to create a new password to protect the WiFi settings from being changed by anyone else. The new password must be at least 8 characters long and consist of a combination of lowercase and uppercase letters and digits.

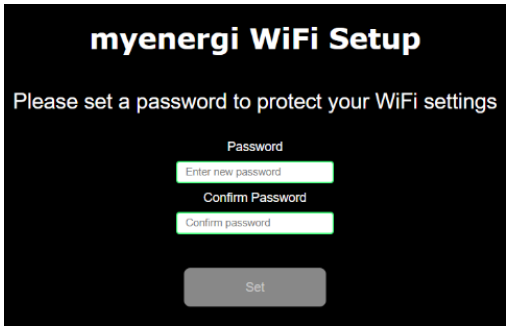

NOTICE
If page doesn't load, type 192.168.4.1 into your web browser of mobile phone browser to enter WiFi setup screen.

Step 10: Wait 5 seconds for your password to change and the webpage to reload.

Step 11: Once connected, you will be directed to the webpage below where you will need to select your home WiFi network from the list in the "Detected Networks" box and type in your home WiFi's password to connect to your router.

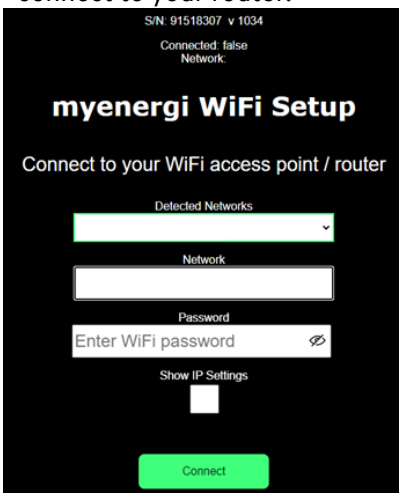

NOTICE
In most cases you should leave the "Show IP Settings" option unticked. However, if you want to give your zappi a fixed IP address then tick the "Show IP Settings" box and fill in the extra information required.

NOTICE
Please be patient. It could take up to 15 seconds for the connection to take place.

Step 12: Once connected, you will see this screen on your zappi display. Press (+) to continue.

```
WIFI Connected

Connected to the
internet

IP:  192.168.90.68

Press + to continue
```

Step 13: By this step zappi should now be internet connected either via WiFi or hard wired Ethernet.
zappi will now check for firmware updates. Please be patient.
If no Firmware updates are available **jump to Step 16.**

```
DOWNLOAD FIRMWARE

Status: New Available
3562S4228 → 3562S4229

Press + to install
```

Step 14: If Firmware updates are available zappi will proceed to download these. Showing the progress percentage on the display.

```
DOWNLOAD FIRMWARE

Status:    Downloading
Image:       3562S4229
Progress:        52.4%

Download Section
```

Step 15: Once download reaches 100% zappi will proceed to install updates.
zappi may reboot during this process.

```
FIRMWARE UPDATE

Installing new
updates. zappi may
reboot during this
process

Progress: 60%
```

Step 16: If zappi has no updates available or after updates have been installed this screen will show on your zappi display informing you that firmware is up to date and giving you the firmware version number.

```
DOWNLOAD FIRMWARE

Status:    Up to date
3562S4229 → 3562S4229

Press + to finish
```

NOTICE
If zappi has been installed alongside another myenergi device, refer to Linking Devices section for guidance on pairing. Also refer to the instruction documentation for the other devices.

Step 17: Go to section “9.5 Testing”.

9.4 WiFi Connection (Retrospective)

If WiFi set-up was skipped during the start up wizard, due to no internet availability at the time of install, the customer will need to set this up themselves as soon as WiFi is available.

The Firmware will also not be updated until an internet connection is made.

Before you leave, ensure that the customer is aware of the actions they are required to take once WiFi is available and where they can find the step by step instructions for this. The instructions can be found below or within the *User Manual* which can be downloaded from the Download Centre on the myenergi website.

Step 1: Firstly, turn on the Access Point by navigating to ***Menu*** > ***Other Settings*** > ***Internet*** > ***WiFi*** > ***WiFi Information*** on your zappi device display. If Access Point is showing as "Off", turn to "On".

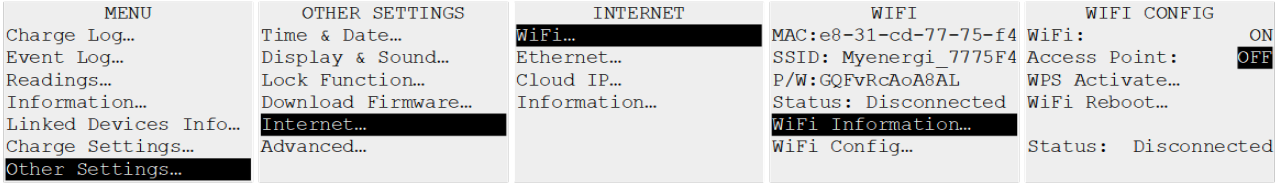

Step 2: Once the Access Point is set to "On", go back to the "WiFi" page by pressing the (≡) button.

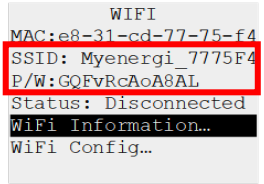

NOTICE
Make a note of the SSID and Password (P/W) now, for use in the next steps.

Step 3: Connect your smartphone or computer to the myenergi access point by entering your phone or computer WiFi Settings and searching for the network displayed with the same name as the SSID you noted down above. Once displayed, select the network to connect.

Step 4: You will be prompted for a password.
Enter the password displayed on the zappi screen that you noted down at step 2.

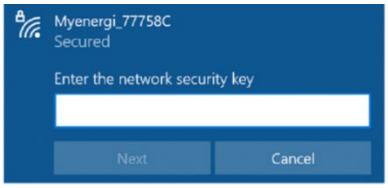

Step 5: You will now be prompted to create a new password to protect the WiFi settings from being changed by anyone else. The new password must be at least 8 characters long and consist of a combination of lowercase and uppercase letters and digits.

NOTICE
If page doesn't load, type 192.168.4.1 into your web browser of mobile phone browser to enter WiFi setup screen.

Step 6: Wait 5 seconds for your password to change and the webpage to reload.

Step 7: Once connected, you will be directed to the webpage below where you will need to select your home WiFi network from the list in the "Detected Networks" box and type in your home WiFi's password to connect to your router.

NOTICE
In most cases you should leave the "Show IP Settings" option unticked. However, if you want to give your zappi a fixed IP address then tick the "Show IP Settings" box and fill in the extra information required.

NOTICE
Please be patient. It could take up to 15 seconds for the connection to take place.

Step 8: Once complete, check WiFi is connected. Do this by navigating back to the WiFi Config Menu as you did at Step 1. Check Status is showing as "Connected".

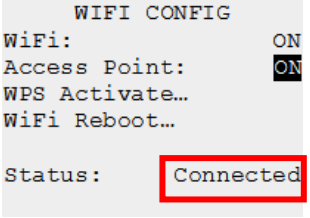

9.5 Testing

Before leaving site, it is important that a few checks are carried out, ensuring the sensors have been correctly installed and are functional.

Step 1: Check that the time and date are correct and are displayed on the bottom left of the main screen. If they are not present or are incorrect, set the correct time and date in the Other Settings/Time & Date menu option.

Step 2: Check that the EV will charge in FAST mode.

Step 3: Check the Grid Power reading at the top right of the main screen is showing sensible readings and the direction of power flow is as expected.

Step 4: With the EV plugged in, switch to ECO mode and check that the charge power is at minimum (about 1.4kW) OR that it is 'tracking' the surplus power (i.e. the Grid Power reading is 0.0kW)

Step 5: If a Generation CT has been installed, check that the generated power is shown in the top left of the main screen. If the generation reading is missing, the most likely cause is the associated CT input is not enabled.

NOTICE
Remember – Only one CT (or three phase set of CTs) can be set to Grid.

10. Pairing Devices

If zappi is being installed as a standalone myenergi device you can skip this section.

Up to 6 myenergi devices can be wirelessly linked together. The device you are using as your 'hub' will count as 2 of the 6 devices. By pairing devices, you can use more of your own energy or have more control and visibility. Devices available are:

eddi — A microgeneration energy diverter that uses surplus power to heat water or rooms rather than exporting to the grid.

zappi — An eco-smart electric vehicle charge point that can use surplus power to charge the car.

harvi — A self-powered wireless sensor that can be used along with myenergi load controlling devices such as libbi, eddi, zappi. It is able to detect grid import/export conditions as well as generation power and send this information wirelessly to devices such as the libbi, eddi or zappi. Using a harvi can greatly simplify installation.

libbi — A battery storage system that allows you to store your surplus self-generated energy for use when you need it most. It allows you to capture surplus PV or wind turbine generation. The libbi Controller enables you to integrate with your existing myenergi devices.

myenergi devices can be linked using either the built-in radio or with an Ethernet cable. If using an Ethernet connection all your myenergi devices simply need to be connected to the local network with an Ethernet cable running directly to the internet router.

10.1 Master and Slave Devices

When two or more myenergi devices are wirelessly linked, one device will act as the *master* device. This device will control the other *slave* devices. Some settings can only be changed on the master device.

Your master/slave on your new device will be set during start-up however, if this ever needs to be changed you can set Master function in the Advanced Settings/Linked Devices menu. It's a good idea to choose the device that is the most convenient to access should you wish to change settings.

- ***Note:*** harvi will only pair with the device which is set as the master
- It is recommended that, where the Grid CT is directly connected to the eddi, that this device is chosen as the master or vice versa. This ensures the fastest response to the grid power measurement.

10.2 Channels

On rare occasions it is possible that there are other appliances operating on the same frequency which could cause interference. If it is not possible to link devices or the connection seems poor, changing the RF Channel may help.

The channel can be changed on devices without having to re-pair them, just makes sure they are all set to the same channel.

10.3 Pairing zappi

Step 1 Go to your 'master' device and in the device menu navigate to:

'Device Settings' > 'Advanced' > 'Linked Devices' > 'Pairing Mode'

```
SEARCHING FOR SLAVE



CH:1
```

Your 'master' will begin searching for 'slave' devices'.

NOTICE
Identify your master device. This can be done by going into the menu of any myenergi device and navigating down to ***Linked Devices.***   ***The device listed in with an 'M' next to it is set as the master.***

Step 2 Go to your zappi menu and navigate to:

'Device Settings' > 'Advanced' > 'Linked Devices' > 'Pairing Mode'

```
SEARCHING FOR MASTER

Pairing Now Active…
   Select Pairing
   On Other Device

   CH:1       113s
```

Step 3 When you see your zappi device display on your 'master' device screen, select (+) or (✓) on your master device to confirm.

```
SEARCHING FOR SLAVES
ZAPPI    12345678



Channel: 1
```

10.4 Device Settings

Most device types have settings which can only be changed via the Linked Devices menu. For example, libbi, eddi and zappi have a setting for priority and harvi has settings to configure its CT inputs.

The device settings are accessed through the Linked Devices menu; select Devices then select the appropriate device and press (+) to bring up the device settings screen. Refer to the relevant device instruction document for more information regarding the actual device settings.

After a device has been paired you will have to wait a few seconds for the device to update before the settings can be accessed. The screen will show DEVICES UPDATING when this is happening.

10.5 Device Priorities

The priority of each, load controlling linked device, can be set from any device with a display. The example below shows one eddi device, two zappi devices and one harvi on the same 'network'. If you have a myenergi libbi, this will be shown in your Devices list.

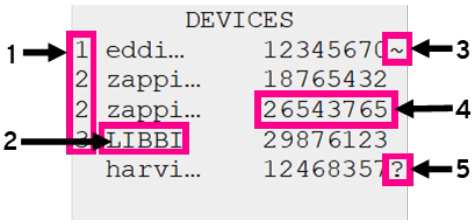

1	The priority is shown on the left of each load controlling device with 1 being the highest priority. If two or more devices have equal priority, the available surplus (for that priority level) is shared between them.
2	The device shown in CAPITAL letters is the device currently being viewed.
3	The ~ symbol indicates which device has the grid CT attached/configured to it . There should only be one in the system.
4	The serial number of each device is shown on the right.
5	If the ? symbol is shown alongside a device, it indicates that communication has been lost from the device (the device cannot be 'heard')

10.6 Removing Devices

A device can be removed by navigating to:

Advanced Settings > Linked Devices > Device menu and then select Remove Device.

If you want to remove ALL devices then go to:

Advanced Settings > Linked Devices > Reset Settings

11. Troubleshooting

Symptom	Cause	Solution
Display is blank	• There is no power to the unit	• Check for correct supply voltage at the supply screw terminals (220 - 260V AC)
In ECO+ mode, the charge does not start, the display is always showing **Waiting for Surplus** and the export power is 0W	• Grid Sensor incorrectly installed • Faulty Grid Sensor • No signal from harvi (if used)	• Check the grid sensor is connected to a CT terminal in the zappi or any CT input in the harvi • Check the Grid CT sensor is installed on the correct cable (see CT Sensor Installation) • Check resistance of the sensor - it should be around 200Ω when not connected (remove the sensor from the cable before testing resistance) • If using harvi, check that the CT input has been set to Grid in the harvi settings (under Linked Devices / Devices in the zappi Advanced Settings menu)
In ECO+ mode, the charge does not start, the display is always showing **Waiting for Surplus**, yet the export power is showing correctly	• Export Margin set too high	• Check Export Margin setting (default is 0W)
Generation power is always 0kW	• Generation CT not installed	• Install generation sensor and connect to one of the CT inputs • Alternatively, if there is no Generation CT, the Generation and House consumption figures can be hidden on the main screen by changing the Icons setting in the Settings / Display & Sound menu
Installation Limit ! displayed Display will show the phase(s) that is(are) overloaded and the prospective current that would be drawn if the zappi were allowed to start charge at the minimum current	• The measured Grid Current is greater than the Grid Limit set in the zappi	• Check the Grid Limit setting • Reduce the load in the property • In a three phase installation, consider rebalancing the property load across the three phases
Installation Limit ! CT displayed	• The Grid CT has become disconnected or is not clamped correctly around the grid supply cable	• Check CT is installed correctly.

12. Fault Codes

If any of the following fault messages are displayed, follow the action described.

Displayed Message	Description	Action
Unknown Cable !	zappi has detected an unknown EV cable (untethered units only) Make sure you are using genuine IEC 62196-2 compliant plugs. Range supported: 32A, 20A and 13A.	zappi will automatically retest the cable after 5 seconds. If the issue persists, unplug the cable check for dirt in the plug and try again.
Pilot problem !	zappi has detected an issue with the "Control Pilot" signal on the cable between the zappi and the EV.	zappi will automatically retest the cable after 5 seconds. If the issue persists unplug the cable, check for dirt in the plug and try again.
Lock Failure ! **Fault code 23**	The socket lock actuator couldn't lock/unlock the inserted plug as expected (untethered units only).	This message can happen when the plug is not fully inserted or if it is twisted or pulled from the socket. Push the plug fully into the zappi to release the plug, then press and hold the button to reset the unit.
Output Fault ! **Fault code 24**	zappi has detected a wrong output voltage. e.g. a voltage has been detected when it should be off.	Unplug the EV, press and hold the button to reset the unit.
PE Fault ! **Fault code 25**	zappi has detected a problem with the main earth connection to the unit. The earth is either disconnected or the impedance of the earth connection is too high.	Unplug the EV, check the earth connection to the zappi and then hold the button to reset the unit. If the electricity supply is "IT earthed" check the Supply Grid / Earthing menu setting.
Comms Fault ! **Fault code 26**	zappi has detected an issue with the built-in protection components.	Unplug the EV, press and hold the button to reset the unit.
SelfTest Failed ! **Fault code 27**	The built-in protection devices couldn't be tested or failed the test prior to a charge.	Unplug the EV, press and hold the button to reset the unit.
Contactor Fault ! **Fault code 28**	The relay inside the zappi has a welded contact. The secondary relay is open to make sure that the supply to the EV is isolated.	Unplug the EV, press and hold the button to reset the unit.
PEN Fault! **Fault code 29**	The internal protection against the loss of the PEN conductor on the electricity supply has tripped.	Unplug the EV, make sure that the fault has been removed then press and hold the button to reset the unit.
Overload ! **Fault code 30**	The EV is drawing too much current – the output is switched off.	Unplug the EV, press and hold the button to reset the unit.
Bad Voltage Range ! **Over Voltage!** **Under Voltage!** **Fault code 31**	zappi has detected that the supply voltage is too high/low and has disconnected the EV to protect it.	Unplug the EV, make sure that the fault has been removed and hold the button to reset the unit.
Overheating!	The zappi unit is too hot – the output is switched off.	Make sure that the zappi is properly ventilated (e.g. has not been covered). Charge will resume once the unit has cooled down again.
Voltage Mismatch ! **Fault code 32**	The output voltage detected by zappi and the built-in protection components is not the same.	Unplug the EV, press and hold the button to reset the unit

If any of the above faults persist then stop using zappi and contact your supplier or myenergi Technical Support.

13. Warranty

Full details of the myenergi product warranty are available on our web site or by using this QR code.

14. Product Registration

Please register your new myenergi devices at https://myaccount.myenergi.com/registration

15. Technical Specifications

15.1 Performance

Mounting Location	Indoor or Outdoor (permanent mounting)
Charging Mode	Mode 3 (IEC 61851-1 compliant communication protocol)
Display	Graphical backlit LCD
Front LED	Multicolour, according to charge status, current and user setting

Charging Current	6A to 32A (variable)
Dynamic Load Balancing	Optional setting to limit current drawn from the unit supply or the grid
Charging Profile	3 charging modes: ECO, ECO+ or FAST. STOP is a further option
Connector Type	Type 2 tethered cable (6.5m) or type 2 socket with locking system
Compliance	LVD 2014/35/EU, EMC 2014/30/EU, EN 62196-2:2017, ROHS 2011/65/EU, CE Certified, EN 61851-1:2019*

**** zappi complies fully with EN 61851-1:2019 with the exception of Clause 8.4 in order to meet the requirements of BS 7671:2018 Amendment 1:2020 which requires the protective earth conductor to be switched in order to provide protection against a damaged PEN conductor in a TN-C-S earthed electrical system.***

15.2 Electrical Specifications

Rated Power	7kW (1-phase) or 22kW (3-phase)
Rated Supply Voltage	230V AC Single Phase or 400V AC 3-Phase (+/- 10%)
Supply Frequency	50Hz
Rated Current	32A max
Standby Power Consumption	3W
Integral Protection	6mA DC residual current protection (RDC-DD in accordance with EN 62955
Economy Tariff Sense Input	230V AC sensing (4.0kV isolated)
Wireless Interface	868 MHz / 915 MHz (-A units) proprietary protocol for wireless sensor and remote monitoring options
Grid Current Sensor	100A max. primary current, 16mm max. cable diameter
Supply Cable Entry	Rear / Bottom / Left side / Right side

15.3 Mechanical Specifications

Enclosure Dimensions	439 x 282 x 122mm	
Protection Degree	IP65 (weatherproof)	
Enclosure Material	ASA 6 & 3mm (UL 94 flame retardant) colours: white RAL 9016 and grey RAL 9006	
Operating Temperature	-25°C to +40°C (Out of direct sunlight)	
Fixing Points	In-line vertical mounting holes	
Weight	Single Phase Untethered: 3.0kg Single Phase Tethered: 5.5kg	Three Phase Untethered: 3.3kg Three Phase Tethered: 7.2kg

15.4 Connectivity

WiFi 2.4 GHz 802.11BGN Connection up to 150 Mbps

WiFi Frequency Range 2412-2484 MHz

Radio Frequency Range 868-870MHz

Radio Frequency (Australia) 915MHz

15.5 Max Transmitted Power

Radio	25mW
WiFi	100mW

16. Model Variants

Model No.	Rating	Connector	Colour
ZAPPI-2H07UW-G	7kW	Untethered	White
ZAPPI-2H07TW-G	7kW	Tethered	White
ZAPPI-2H07UB-G	7kW	Untethered	Black

ZAPPI-2H07TB-G	7kW	Tethered	Black
ZAPPI-2H22UW-G	22kW (3-Phase)	Untethered	White
ZAPPI-2H22TW-G	22kW (3-Phase)	Tethered	White
ZAPPI-2H22UB-G	22kW (3-Phase)	Untethered	Black
ZAPPI-2H22TB-G	22kW (3-Phase)	Tethered	Black

Designed to permit installations compliant with IET Wiring Regulations BS 7671:2018 Amendment 1:2020 and the Electricity Safety, Quality, and Continuity Regulations 2002 and BS 8300:2009+A1:2010.

17. Technical Support

If you experience any issues with your zappi during or post installation, please contact our Technical Support Team by scanning the QR Code below.

Please contact us directly for the quickest solution.

Appendix A

Electric Vehicle (Smart Charge Points) Regulations 2021

As of 30th June 2022

Relevant to zappis INSTALLED from 30th June 2022

1. Electric Vehicles (Smart Charge Points) Regulations 2021

From 30th June 2022, any EV charger installed in a private setting i.e. home or workplace NOT public, in England, Scotland and Wales has to meet the Electric Vehicles (Smart Charge Points) Regulations 2021.

1.1 Purpose of the Regulations

The new smart charging regulations are a huge, positive forward-step by the UK Government in preparing our homes and businesses for a smart, connected and democratized energy system. Essential tools in driving down emissions and a core reason why myenergi exists.

The regulations are focused around when you are charging an EV. The aim of the regulations is to prevent everyone charging at the same time and putting too much demand on the grid.

1.2 What's changed with zappi

New features have been added to zappi to ensure our products remain compliant with UK Regulations.

These include:

- **Randomised Delay** – At the start of a charge and end of a scheduled, Timed Boost there will be a delay of up to 10 minutes before your vehicle starts and stops charging. This could be a few seconds or it could be up to the full 10 minutes. This is necessary to ensure everyone does not overload the grid by starting to charge or ending a charge at the same time. The Randomised Delay can be overridden, if necessary (See 1.3.2 for further details).
- **Smart Scheduling** – To comply with the smart charging regulations your zappi will be set to charge in off-peak hours by default. This is between 00:00 – 08:00. You may change this schedule at any time if you would prefer to charge in peak hours or your electricity tariff off-peak hours differ from those set.
- **Default to ECO+ mode** – If Smart Regulations apply, zappi will default to ECO+ mode on first boot up.
- **Charging logs** – You will now be able to view a record of charging logs from the past 13 months. See Charge Logs section below for further information.

1.3 Randomised Delay: How it works

As mentioned above, Randomised Delay will put a completely random delay at the start of a charge and end of a scheduled, Timed Boost, for up to 10 minutes. This can be overridden by the customer in situations where they are in a hurry.

1.3.1 Delay Status

You will be able to see if your charger is in a state of delay at any time as it will be displayed on both the zappi screen and in the myenergi app.

1.3.2 Overriding the delay

To override the delay simply press the '+' button on the zappi or press the 'charge now' button displayed in the pop-up message within the myenergi app. If the delay is overridden your charge will start/stop immediately.

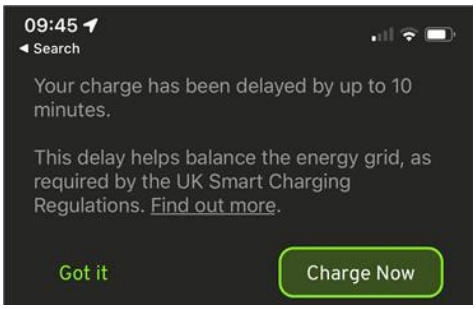

You cannot permanently override the delay function. If you wish to override the delay each time you charge, you will need to follow the above instruction to override on every applicable charging session.

1.4 Smart Scheduling: How it works

As summarised under section 1.2 your zappi will be set to charge in off-peak hours by default from initial start-up.

1.4.1 Off-peak hours

Off-peak hours are usually between 00:00 – 08:00, depending on your specific tariff, this is when your electricity will be at it's cheapest.

1.4.2 Reason for Smart Scheduling

Encouraging you to charge in off-peak hours prevents overloading the grid in peak times.

1.4.3 Benefits of Smart Scheduling

Smart Scheduling will can help you spend less on your electricity. By charging in off-peak hours your electricity tariff may be cheaper.

1.4.4 Changing the set schedule

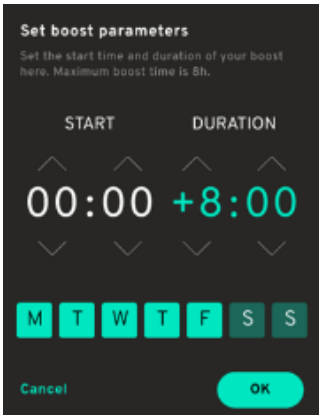

If the default schedule does not suit your requirements, or your electricity tariff's off-peak hours differ from the schedule set, you can amend your schedule at any time from the zappi menu or within the myenergi app.

To adjust your schedule in the app navigate to the 'Set Boost Parameters' option, select start time and set the number of hours you want your charger to boost for.

To change the schedule on your zappi device navigate to 'Charge Settings > Boost Timer' and amend the schedule as desired. *For further information see the Timed Boost section of the User Manual.*

Alternatively, the schedule may be deleted altogether, if required. To do this ensure all inputs are set to 00:00 for each day of the week.

1.5 Defaulting to 'ECO+' Mode

As mentioned in section 1.2 if your zappi meets the Smart Regulation parameters it will default to ECO+ mode upon first start-up. This can be changed to ECO+ or FAST mode at any time by the customer. *See Charging Modes section of the User Manual for further information on modes.*

1.5.1 Manual Boost

If you choose to remain in ECO+ mode you can still charge from the grid at any time by doing a Manual Boost. *Refer to Manual Boost section of the User Manual for further information on this existing feature.*

1.6 Charging Logs

Providing your zappi is internet connected and you have registered your device in myaccount you will be able to view a record of charge logs for the last 13 month period. This function will begin from 30th June 2022 so the earliest time you will see the whole 13 months will be from July 2023 or 13 months from when your device was connected to the internet. The charge logs will tell you when the charge started, when the session ended and the duration of each session.

To view your logs log into your account at https://myaccount.myenergi.com/login

Navigate to "My Energi Usage" in the left hand menu. The charge logs will be displayed like to example below.

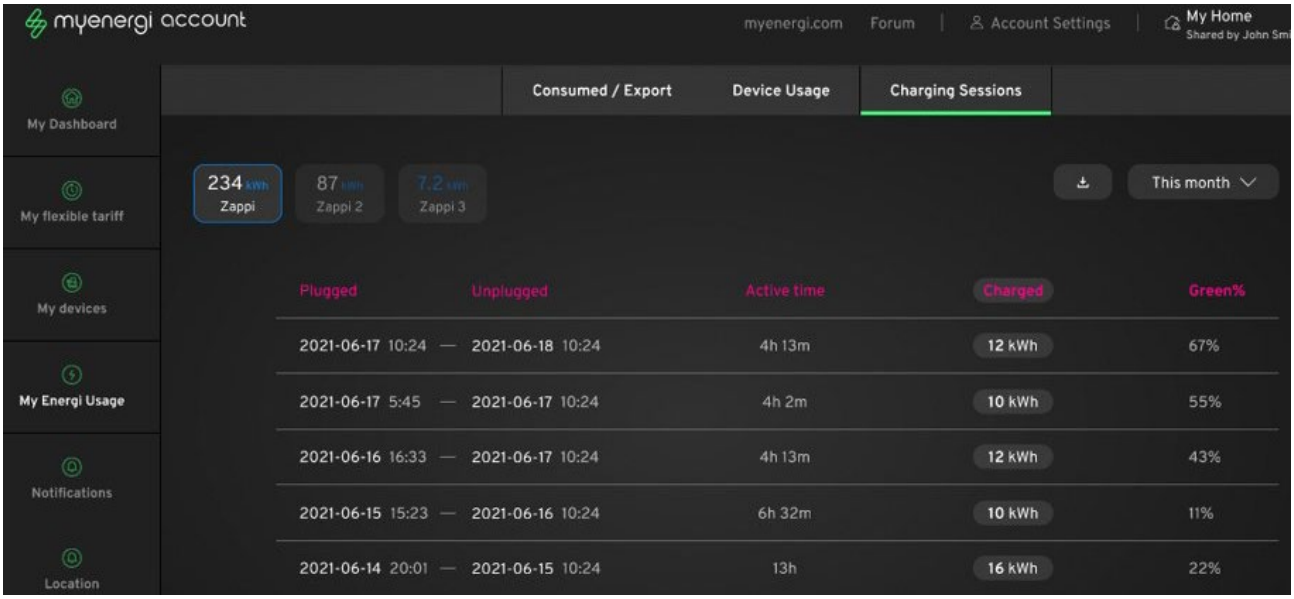

Appendix B

Electric Vehicle (Smart Charge Points) Regulations 2021

As of 30th December 2022

Applies to all zappis Installed on or after 30th December 2022

2. Electric Vehicles (Smart Charge Points) Regulations 2021

In addition to the regulations explained in Appendix A, from 30th December 2022, any EV charger installed in a private setting i.e. home or workplace NOT public, in England, Scotland and Wales has to meet FURTHER conditions to the Electric Vehicles (Smart Charge Points) Regulations 2021.

2.1 Purpose of the Regulations

Every day cyber criminals make attempts to target individuals and organisations. With a cyber attack attempted every 39 seconds these regulations have been put in place to mitigate the risk of this and ensure your device and information is secure from increasingly sophisticated attacks.

2.2 What's changed with zappi

The following features have been added to all zappis to comply with the Electric Vehicles (Smart Charge Points) Regulations 2021, Schedule 1, from 30th December 2022:

Set-up Wizard – The set-up wizard at power up has been changed to ensure smoother initial set-up. This includes internet connection and firmware updates upon start up.

Automatic Firmware Checking – zappi will regularly check for new software and will automatically display a message on your zappi screen to let you know in the myenergi app when updates are available.

Tamper Detection – We have added built-in tamper detection to alert you if anyone has removed the front cover of your zappi. You will be alerted in the myenergi app when tamper activity is detected.

Encryption – To protect your data from eavesdroppers zappi uses Advanced Encryption Standard (AES) to securely communicate throughout your home and across the internet.

2.3 Automatic Firmware Checking

Being on the latest firmware is one crucial way to prevent security breaches. To ensure you are always on the most up-to-date firmware, your zappi will regularly check for new software and you will be notified in your myenergi app when updates are available.

You then have the option to select "Install now" or "later".

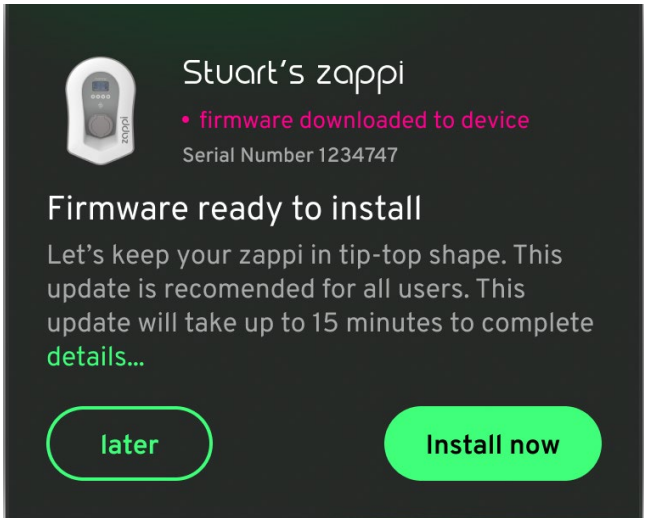

NOTICE
Firmware updates can only be delayed up to 3 times.

2.4 Tamper Detection

A tamper detection feature has been added to our zappi devices. This ensures that any time the cover is removed from your zappi you will be alerted that it has been tampered with.

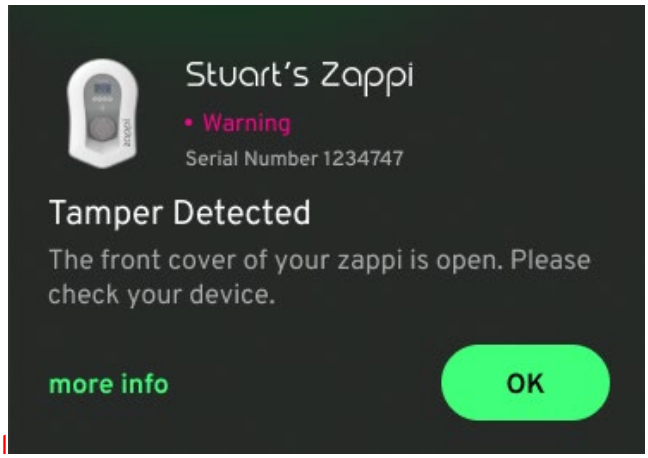

2.5 AES Encryption

To protect your data from eavesdroppers zappi uses Advanced Encryption Standard (AES) to securely communicate throughout your home and across the internet.

Linked devices will communicate via AES and communication between your devices and the internet will also be via AES.

For customers with older myenergi devices that don't have the compatibility to communicate in encryption there is a new device menu setting which allows you to turn off encryption. If encryption is turned off this will only turn off encrypted communication locally between devices. Communication externally across the internet will still use encryption.

2.6 Installer Requirements

It is the responsibility of the installer to ensure they are compliant with Electric Vehicles (Smart Charge Points) Regulations 2021. This includes, but is not limited to:

- Installing only compliant charge points in private installs from and including 30th December 2022.
- Answering the start-up wizard questions accurately to reflect actual install parameters.

- Having a Technical File and/or Declaration of Compliance available if requested by the customer (myenergi's Technical File and Declaration of Compliance is available at: https://myenergi.com/guides/smart-charge-point-regulations-explained/

The installer should ensure they are fully aware of and understand how the regulations affect them and what they are required to do to ensure they comply. These regulations should be monitored for any future updates. For further information or to view the current Electric Vehicles (Smart Charge Points) Regulations 2021 visit:

https://www.legislation.gov.uk/ukdsi/2021/9780348228434

or

https://www.gov.uk/guidance/regulations-electric-vehicle-smart-charge-points

Further information can also be found by following the QR code below which will take you to myenergi's Smart Regulations webpage which contains reference documents, FAQs and simplified explanations of the regulations.

https://myenergi.com/guides/smart-charge-point-regulations-explained/

Appendix C

3. How to set up zappi for OCPP 1.6J

3.1 Overview

Open Charge Point Protocol (OCPP) allows communication between EV charge points and a charging station network or network operator who can provide centralised reporting and/or control of multiple EV charge points. Customers with later zappi models; those with built-in WiFi, will be able to set up OCPP. The following model codes support OCPP 1.6J:

ZAPPI-2H07UW	ZAPPI-2H07UB,
ZAPPI-2H07TW	ZAPPI-2H07TB,
ZAPPI-2H22UW	ZAPPI-2H22TW,
ZAPPI-2H22UB	ZAPPI-2H22TB,
ZAPPI-2H07UW-G	ZAPPI-2H07UB-G,
ZAPPI-2H07TW-G	ZAPPI-2H07TB-G,
ZAPPI-2H22UW-G	ZAPPI-2H22TW-G,
ZAPPI-2H22UB-G	ZAPPI-2H22TB-G,
ZAPPI-2H07UW-T	ZAPPI-2H07UB-T,
ZAPPI-2H07TW-T	ZAPPI-2H07TB-T,
ZAPPI-2H22UW-T	ZAPPI-2H22TW-T,
ZAPPI-2H22UB-T	ZAPPI-2H22TB-T.

There is no cost involved with using the myenergi OCPP gateway, however, the network operator may charge for their services. It's easy to set up your zappi with OCPP in a few simple steps.

3.2 Requirement

- **You'll need a zappi with built-in WiFi to use OCPP.** These zappi's can be identified by a 'H' in their model number. They also have a serial number starting with a 2xxxxxxx. Your zappi can be connected to the internet by any connection method for OCPP[6].
- **You'll need to have updated your zappi to the latest firmware**; V5.113, to get started. If you're unsure how to do this, please see our article here: https://support.myenergi.com/hc/en-gb/articles/15513070753169-V5-Firmware-Updating-a-zappi-v2-0
- **You must have a myenergi myaccount.** It's free to sign up but you must have your zappi registered on myenergi myaccount (https://myaccount.myenergi.com).
- **Your zappi should be set as vHub.** (If you have more than one zappi, one of them should be set as vHub)

NOTE

- Please ensure you have an agreement with the OCPP platform provider, prior to connecting to their service.
- Configuring OCPP means you agree to myenergi sharing usage data with the third party you selected. The provider will also be able to control your zappi and adjust some of the configuration settings of your zappi.

[6] Your zappi must be connected to the internet using the built in WiFi, wired Ethernet or via a radio link to another myenergi device which is acting as the internet gateway.

3.3 Setting up the OCPP provider

1. Go to your myenergi myaccount: https://myaccount.myenergi.com
2. Sign in or create an account, if you haven't already done so
3. On the side bar, click on the "location" tab, then click "myenergi products"

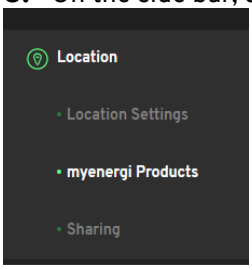

4. Find the zappi, you wish to connect to the OCPP provider, and select "OCPP Settings".

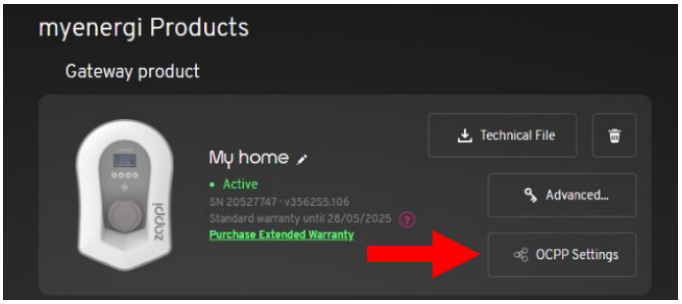

5. In the form that appears, you can either:
   a. Select your OCPP provider from the dropdown menu or;
   b. Select Manual/Other and enter the details provided by your OCPP service provider.

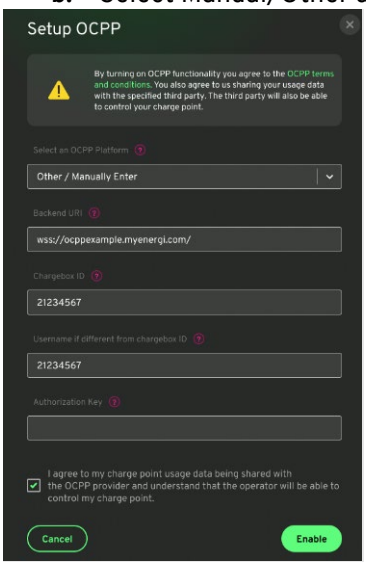

If you don't use one of our presets from the dropdown list, you'll need to configure the following settings:

- **Backend URI**[7]**:** This looks like a web address and should start wss:// or ws://[8]. This will be provided by the OCPP provider you choose[9].

[7] URI or "Uniform Resource Identifier"

[8] If you're connecting in Great Britain and your zappi falls into the scope of the Smart Charging Regulations, you should ensure a secure WebSocket connection is used. (This means the address will start WSS:// instead of WS://). This means that the data between myenergi and the provider is encrypted. For security reasons, regardless of your location we recommend all customers use WSS:// URI's where the provider has this option

[9] ensure that the URI address ends with a forward slash (/). For example, if a provider gives their URI as wss://ocppexample.myenergi.**com**, you should type wss://occpexample.myenergi.**com/**

- **Chargebox ID**: For most customers you will not have to change this field. By default, it will be the serial number of your zappi. Some platform providers may ask you to change this field. Your provider will tell you if they need you to change this information.
- **Username**: For best practice this should match the Chargebox ID. For most customers, it will not be necessary to change the default, which is the zappi serial number. If you do change the Chargebox ID you should also change the username to match
- **Authorization Key:** Some providers may give you an authorization key which is necessary for the charger to connect to their platform. Not all providers use them and you can leave this blank if you haven't been provided with one (this might also be referred to as a password). Speak to your OCPP platform provider if you're unsure.

6. Finally, accept the terms and conditions and select "Enable". That's it.

3.4 Troubleshooting OCPP

Not Connecting?
Please use this checklist:

1. Please check your charge point is online in your myenergi myaccount. You should see online on the my products page
2. Try rebooting the charge point. You can do this by pressing the menu icon on zappi and holding the button down until the charge point restarts
3. The Chargebox ID matches what you've entered into the platform you've chosen (Sometimes this will be referred to as an EVSE ID)
4. The username and Chargebox ID match
5. If you were provided with an authorization key, please check it matches what the provider gave you and there is no whitespace (particularly at the end, if you've copied and pasted)
6. Go to the OCPP settings and check:
   a. The URI matches what was given by your platform provider
   b. The URI ends with a forwards slash (/)
   c. If you have chosen the Other / Manual setup option and you're using a Secure WebSocket Connection, (starting WSS://), ask your provider if they have an unsecured WebSocket URI (starting WS://).

Whilst we don't recommend using the unsecure WebSocket (WS://) for ongoing use, it can help us understand if there is a problem establishing a secure connection with the provider you have chosen. If, after this step, your connection works, please let us know by contacting our Tech Support (details on page ***Error! Bookmark not defined.****) and we'll try to reach out to the provider to solve the issue.*

myenergi

Designed and manufactured in the UK by
myenergi Ltd, Pioneer Business Park, Faraday Way,
Stallingborough, Grimsby, DN41 8FF

T: +44 (0)333 300 1303
E: sales@myenergi.com
W: myenergi.com