ČESKY
NÁVOD K POUŽITÍ
spojky EN 362:2004 / karabiny EN 12275:2013

ENGLISH
INSTRUCTIONS FOR THE USE
Connectors EN 362:2004 / EN 12275:2013

Do not use this product without having read carefully and understanding these technical instructions.
These instructions contain all the necessary information for the correct and safe use of the connectors in the fields of activity: rescue, mountaineering, climbing, caving, "Via Ferrata", mountain skiing, rafting, free climbing, working at heights,...
The connectors covered by these instructions are personal protection devices designed to be integrated in fall arrest personal protection systems such as harnesses, ropes, etc. The full body harness is the only acceptable body retaining device that can be used in a fall arrest system. The connectors are a vital transmission component of the mechanical resistance between a proper anchorage point and the user who may accidentally fall. A malfunction due to improper use of the equipment is dangerous for the physical health of the user.
The connectors must be used as follows: closed – with the closing system locked – without any constrictions or other pressures on the outer side of the connector. Before using the connectors, the user must be adequately trained in the techniques and security measures to be adopted. Those persons, who are not trained or are not able to evaluate the dangers of the situations in which the devices are used, must not use these devices. The user must be informed of the existence of an emergency plan, present at the place of work, necessary to handle any possible emergency that can arise.
To ensure the good maintenance and traceability of this product it is best to allocate it to a sole user; if not possible the product shall be checked by competent persons before and after use. If necessary, there must be an efficient and safe rescue method to be adopted should a person find himself in difficulty while using this product. Always verify that the physical conditions of the user are such that the connector is used safely during ordinary as well as emergency use.
The situations where the device could be used incorrectly are many. Only some of these incorrect uses are included in these instructions and these are indicated with a cross over the illustrations.
Only the ways indicated as "CORRECT" are allowed. Any other use is **PROHIBITED**.
Always verify before use that your equipment consists of products compatible with each other and is in conformity with the applicable regulations, standards and directives in force. Also verify that the system has been properly assembled and that each component functions without interfering with any of the other components.
When a connector is inserted in any fall arrest system, in order to regulate the other components correctly and not compromise the efficiency of the system you must take into account the length of the connector. Using a personal protection device against falls does in no way justify exposing yourself to any type of risk that may even lead to fatal consequences. The user is responsible for the risks to which he exposes himself. The manufacturer and the seller decline any and all responsibility in case of incorrect use, improper application or for products having been modified or repaired by persons not specifically authorized by the producer. The producer assumes the responsibility only for the use which the product is designed for; and is not responsible for cases of bad maintenance and for cases of user negligence which can aggravate the dangerous conditions which can arise during the use of the connector. The producer declines any and all responsibility for accidents, injuries or death due to improper and incorrect use of its products by the user. The producer declines any and all responsibility for all the cases in which the above-mentioned instructions are not followed. The producer declines any and all responsibility for cases in which a finished product is put on the market without the instructions and technical card. It's essential for the safety of the user that if the product is re-sold outside the original Country of destination the reseller shall provide these general instructions for use in the language of the Country in which the product is to be sold.
IMPORTANT: Before using the connector always check its condition; there must not be any signs of wear, corrosion, deformation or defects in general. If you have any doubts, do not use the connector and replace it immediately. The closing system must function perfectly and to help assure this, the connector must be adequately lubricated. This product is designed form use in normal atmospheric conditions (conditions normally tolerated by man).
Table 1 contains indication of standard, class or type of connector, and maximum opening of the gate (dimension d in mm – fig. 10).
TYPES OF CONNECTORS FOR MOUNTAINEERING (EN 12275:2013):

TYPE B BASIC CARABINER
Versatile carabiner in various forms and sizes for use in fall arrest system. The bent gate allows easy insertion of the rope at sport climbing. Maybe fitted with screw or automatic locking mechanism.

TYPE H HMS CARABINER
Peer shaped carabiner primarily used for progressive belaying with munter hitch (HMS). For safety reasons the carabiner is usually fitted with screw or automatic locking mechanism (fig. 9).

TYPE K SPECIAL CARABINER FOR VIA FERRATA
Carabiner with automatic locking mechanism used for self-belaying on "via ferrata" (klettersteig). Wide opening of the gate enables the use on metal cables, chains and other anchor elements.

TYPE D DIRECTIONAL CONNECTOR (fixed position of the rope)
Shape of this carabiner prevents from dangerous side loading of the carabiner. Designed to be used exclusively with express sling EN 566.

TYPE X OVAL CARABINER
Carabiner with symmetric shape designed for e.g. aid climbing and pulleys or for connection of a rappelling device.

TYPE Q SCREWED-CLOSURE CONNECTOR
Connector, which is closed by screw-motion gate, which is load bearin partwhen fully screwed up. Intended for enduring or permanent connections.

WARNING! Always insert the rope in the connector from the external part of the rock as shown in fig. 3, otherwise a fall CAN CAUSE THE ROPE TO ACCIDENTALLY COME OUT.
During use check that the connector doesn't hit any obstacles and doesn't touch the rock in any way (fig. 4). An impact against rocks, a sharp projection of the rock pressing on the gate, vibrations caused by the rope running rapidly through the connector can cause the gate to open and thus decrease the resistance of the connector seriously.
IMPROPER USE REDUCES THE RESISTANCE AND LIFETIME OF THE CONNECTOR (fig. 8).
When using HMS with munter hitch for belaying, out the rope into the carabiner in such a way, that it does not come into contact with the carabiners locking mechanism.
Carabiners with automatic locking mechanism, the gate is secured against opening automatically without user intervention.
TYPES OF CONNECTORS FOR PERSONAL PROTECTION (EN 362:2004), fig. 2:

Class B BASIC CONNECTOR
Universal connector intended to be used as a component of fall arrest system, which is equipped with manual or automatic locking mechanism;

Class M MULTI-USE CONNECTOR:
Basic or screw link connector intended to be sued as a component, which may be loaded in the major and minor axis;

Class T TERMINATION CONNECTOR
Connector intended to be used element of a sub-system in which the loading acts on a predetermined direction;

Class A ANCHOR CONNECTOR
Connector designed to be linked directly to a specific type of anchor.

Class Q SCREW GATE CONNECTOR
Connector, which is closed by screw-motion gate, which is load bearing part of the connector when fully screwed up. Intended for enduring or permanent connections.

ANCHORS: Use only anchors complying with the EN 795 with a minimum breaking strength of 12 kN. While using the connector and other personal protective devices, the user must always remain below the anchor point (fig. 5). The position and the height of the anchor point from the ground, must be calculated in the view of a possible fall, taking into account the length of the rope and of the devices connected to the rope, any dangerous obstacles, and the possibility of a "swinging" effect. The work must be carried out in such way as to minimize both the potential fall and potential fall distance.
WARNING: The connectors equipped with a manual-locking gate (screw gate) are to be used only when the opening and closing operations are not frequent. When using these connectors the screw must be completely closed. For connectors class Q verify that the thread of the screw is not visible. Avoid loading a connector across its gate. Verify that a technical identification and control card in conformity with standard EN 365:2004 is provided with the product. This card must be filled in and kept updated by the user. If the card is missing, do not use the device.
SLINGS: Use only certified slings marked with **CE**, which are in conformity with **EN 566** having a minimum breaking load of **22 kN**. Before each use verify that the webbing is in good condition, there are no signs of wear, abrasions, cut threads or fraying weave. If the webbing shows any one of the mentioned defects, replace it immediately. In any case always replace the webbing after a serious fall.
Warning: Be sure the sling is inserted in the correct position.
MATERIALS: All the materials and treatments used are antiallergenic; they do not cause skin irritations or sensitivity. The connectors are made of zinc plated steel; polished or anodized light alloy; polished stainless steel.
MARKING: The following information are marked on the connector: CE marking; 1019 (no. of notified body shell carrying out conformity with type); Name of the manufacturer or of the person responsible for the introduction on the market; EN 362:2004 (N° and year of the standard: "Personal Protection Equipment Against Falls From Height – CONNECTORS") followed by a letter identifying the class of the connector; letter in the circle identifying the type of carabiner for mountaineering, Logo that warns the user to read the instructions for use carefully; Production lot number; Year of production; Maximum load applicable in kN (table P), the strength indicated is the lowest value guaranteed by the producer, name or model code. This information can be engraved on different places depending on the size of the connector. CHECK the legibility of this marking after each use.
MAINTENANCE (fig. 7): ALWAYS REPLACE the connector after a fall even if no defect or damage is visible. The initial resistance of the connector could be seriously reduced. The possibility of re-using must be authorized exclusively by the producer with a prior written consent that reserves the right to carry out appropriate examinations and testing. Any repair shall only be carried out in accordance with producer's procedures. **REPLACE** the connector that shows signs of wear and corrosion. **REPLACE** the connector if opening and/or closing/locking are difficult. Clean the connectors with soft water and dry it with a non-abrasive cloth. Pay special attention to the slot on the lever, which has to be free of dirt (soil, mud, gravel etc.), snow or ice.
LUBRICATE the mobile components with a specific silicone based lubricant (ensure, the lubricant does not come into contact with the textile parts). If the connector comes in contact with salt water, wash it immediately and lubricate it.
All necessary repairs shall be carried out by competent person authorized by producer according t the instructions provided by producer.
DISINFECTION: Dissolve a disinfectant which contains quaternary ammonium salts in warm water (max 20 °C). Soak the tool in this solution for one hour. Rinse with potable water and dry it with a clean cloth.
STORAGE AND TRANSPORT: Store the product in a cool, dry, well-aired place. There must not be any corrosive or solvent substances or heat sources (max 100 °C) in the storage place.
The connector must not come in contact with other sharp objects which could damage it. Never store the equipment before having thoroughly dried it and avoid storing it in places with a high saline concentration. Except for the above-mentioned indications, there are no special precautions to be used during the transport.
Avoid leaving your equipment in a car or in a closed place exposed to the sun.
LIFETIME: Lifetime of this product is not strictly limited by the manufacturer. Depending on the condition of the product and its history it may be necessary to retire it immediately (e.g. after hard fall, visible signs of damage,...). Lifetime of this product can be influenced by various factors such as: frequent or improper use; usage environment (humidity, high temperatures, ice); wear; corrosion; excessive loading; exposure to heat sources; improper storage; etc.
Except of required inspections performed by the user, this product must be checked at least once every 12 months by a competent person following manufacturer's procedures.
The results of the inspections must be recorded.
WARNING: Bare in mind that after one single extreme event, your equipment could result unsuitable for further use.

DEUTSCH
BEDIENUNGSANLEITUNG
für Karabinerhaken – EN 362:2004 / EN 12275:2013

FRANÇAIS
LE MODE D'EMPLOI

ESPAÑOL
INSTRUCCIONES PARA EL USO

PORTUGUÊS
INSTRUÇÕES DE USO

ITALIANO
ISTRUZIONI D'USO

singing rock®

CONNECTORS

Nařízení evropského parlamentu a rady (EU) 2016/425 | Regulation (EU) 2016/425

Posouzení shody | Conformity assessment: viz Tab 1 | see Tab. 1
Shoda s typem | Conformity to type: viz Tab 1 | see Tab. 1

NB 1015 – SZÚ Brno, branch Jablonec nad Nisou, ČR
NB 1019 – VVUÚ Ostrava-Radvanice, ČR
NB 2777 – Satra Technology Europe Ltd., Bracetown Business Park, Clonee, Dublin 15, Dublin, Ireland

EU prohlášení o shodě naleznete na:
EU declaration of conformity available on:
www.singingrock.com

6 SINGING ROCK ZNAČENÍ | MARKING

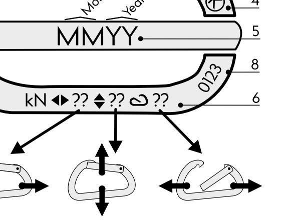

1 CZ značka shody | EN conformity marking | DE die Konformität Markierung | FR la marque de confirmit | ES marca de conformidad
2 oznámený subjekt č. | no. of notified body | Nummer des zertifizierenden Instituts | Num ro de bureau notifi | numero del organismo notificado
3 výrobce | producer | Hersteller | Le fabricant | fabricante
4 typ | type | typ | type | tipo
5 měsíc/rok výroby | month/year of manufacture | produkzion monat/jahr | mois/année de fabrication | mes/año de producción
6 pevnost | strength | Stärke | résistance | resistancia
7 viz k návod k použití | read instructions for use | Gebrauchsanweisung beachten | Consulter les instructions d'utilisation | Consulte las instrucciones de uso
8 jedinečné číslo | unique No. | Eindeutige nummerr | Numéro unique | Número único

7

1

EN 12275:2013 Mountaineering equipment

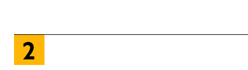

2

EN 362:2004 Personal protective equipment against falls from a height

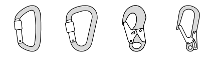

3

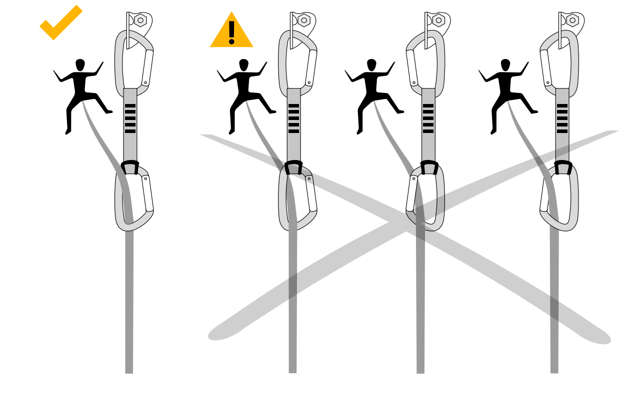

4

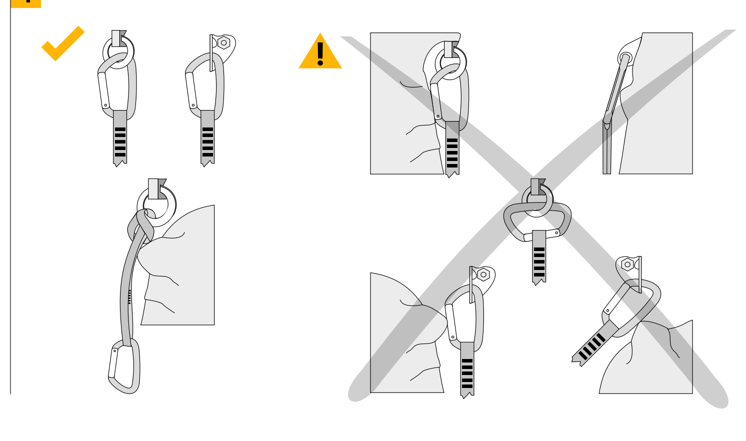

5

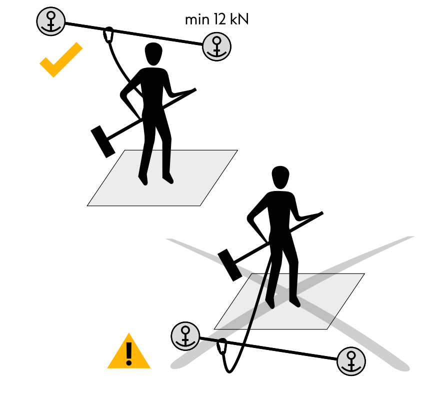

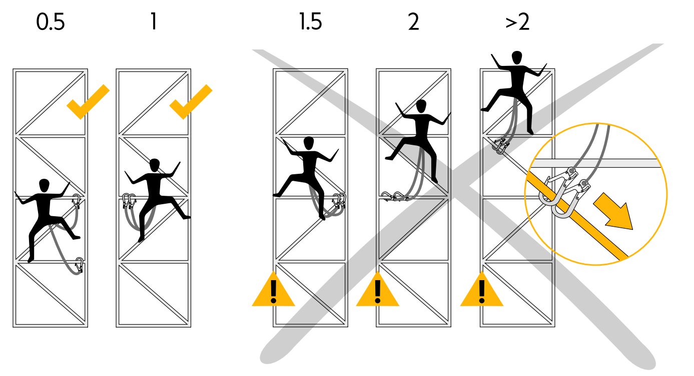

8

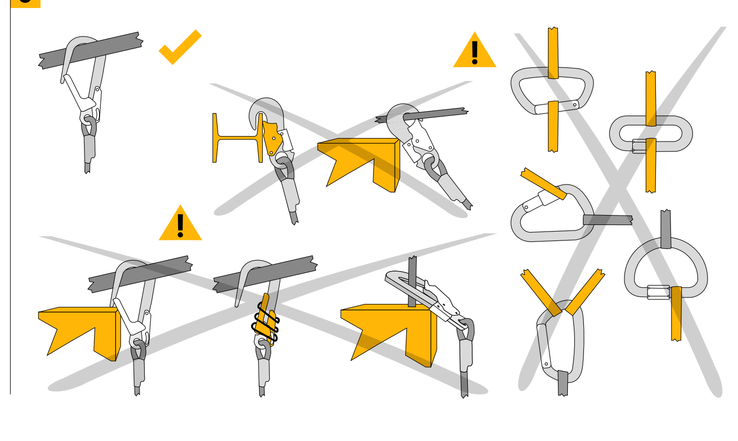

9

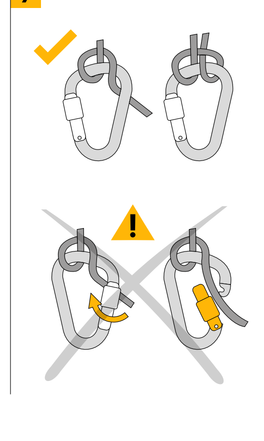

10

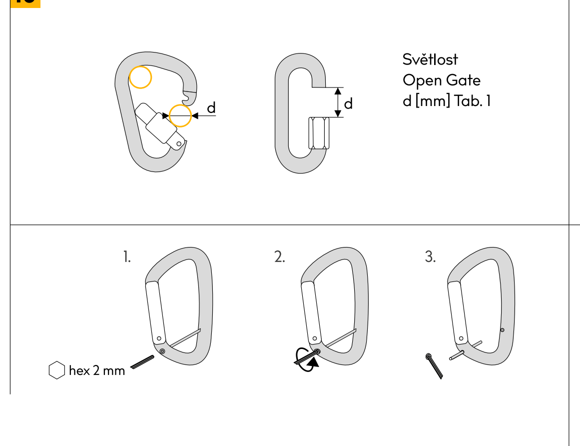

CZ Bez důkladného pročtení a pochopení návodu k použití nepoužívejte tento výrobek.
EN Reading and understanding instruction for use are required to use this product.
DE Das Lesen und Verstehen der Bedienungsanweisung ist Voraussetzung für die Nutzung des Produkts.
FR Sans avoir lu attentivement ce mode d'emploi, n'utilisez pas ce produit.
ES Es necesario leer y comprender las instrucciones de uso de este producto.

CZ 2 roky záruka.
EN 2 years guarantee.
DE 2 Jahre Garantie.
FR La garantie de 2 ans.
ES 2 años de garantia.

ver. 16K002204000 0121

SINGING ROCK s.r.o.
Poniklá 317 • 514 01 Poniklá • Czech Republic
Tel. +420 481 585 007 • email: info@singingrock.cz
www.singingrock.com
singingrock.page
singingrock_official

NORSK
BRUKERVEILEDNING

SLOVENSKY
NÁVOD NA POUŽITIE

SLOVENŠČINA
NAVODILO ZA UPORABO

POLSKI
INSTRUKCJA UŻYTKOWANIA

MAGYAR
HASZNÁLATI ÚTMUTATÓ

LIETUVIŲ
NAUDOJIMO INSTRUKCIJA

БЪЛГАРСКИ
ИНСТРУКЦИИ ЗА УПОТРЕБА

посочваща класа на конектора, типа карабинер, Лого, което предупреждава потребителя внимателно да изчете и да се запознае с инструкциите за употреба, собствен номер на производство, година на производство, максимално натоварване, показано в kN (таблица P), индикираната здравина на продукта е най-ниската стойност, гарантирана от производителя; Име или код на модела. ПРОВЕРЯВАЙТЕ дали надписите са четливи след всяка употреба.
ПОДДРЪЖКА (фиг. 7): Винаги спирайте да употребявате даден конектор след падане, при наличието на дефект, или видима деформция. Първоначалната здравина на конектора може да бъде сериозно намалена при изброените ситуации. За да продължите употребата на конектори, за които имате и минимални съмнения трябва да бъдете оторизирани от производителя с писмено съгласие, след като се проведат определени тестове. Всеки неоторизиран опит за ремонт или промяна на контектора е в противоречие с производителя.
Отстранете от употреба всеки конектор, по който има следи от износване и корозия.
Отстранете от употреба всеки конектор, който се отваря, затваря или и двете с трудност.
Почиствайте конекторите със сладка вода и ги подсушавайте с неабразивна кърпа.
Специално почиствайте ключалката на конектора, по която не трябва да се събира никаква мръсотия (прах, кал, пясък и т.н.) сняг или лед.
СМАЗВАЙТЕ подвижните компоненти със специална смазка на силиконова основа (уверете се, че смазката не достига до текстилните компоненти)
Ако конекторът се намокри със солена вода, трябва незабавно да го измиете и да го смажете.
Всеки необходим ремонт или промяна на съоръженията трябва да се извършват от компетентно лице, оторизирано от производителя и в съгласие с всички инструкции.

Tab. 1

model	type EN 12275:13	class EN 362:04	d [mm]	Certified by NB	Inspected by NB
K0122	X	B	21	1019	1019
K0123	X	B	21	1019	1019
K0124	K	T	28	1019	1019
K4080	-	B	25	1019	1019
K4081	-	B	25	1019	1019
K0114	H	B	26	1019	1019
K0121	H	B	26	1019	1019
K0007	H	B	21,5	1019	1019
K0008	H	B	21,5	1019	1019
K0009	B	-	19	1019	1019
K0025	B	-	19	1019	1019
K0010	B	-	20	1015	1019
K0011	B	-	20	1015	1019
K0012	B	B	17	1015	1019
K0013	B	-	22	1015	1019
K0020	B	-	22	1015	1019
K4241	-	B	18	1019	1019
K0016	X	B	20	1019	1019
K0017	X	B	20	1019	1019
K0018	X	B	20	1019	1019
K0019	H	B	21,5	1019	1019
K4310	B	-	25	1019	1019
K0107	H	B	22	1019	1019
K0108	H	B	22	1019	1019
K0110	B	-	21	1019	1019
K0111	B	-	21	1019	1019
K0112	B	B	18	1019	1019
K0113	B	-	22	1019	1019
K0120	B	-	22	1019	1019
K0119	H	B	22	1019	1019
K3550	-	A	110	2777	2777
K3536	-	A	60	2777	2777
RK001	B	-	20	1019	1019

KONTROLA I INSPECTION

Model Model			
Jedinečné číslo Batch/unique nr.		Datum prodeje Date of sale	
Datum výroby Date of manufacture		Datum prvního použití Date of first use	

Inspekce osobou odborně způsobilou pro periodické prohlídky podle výrobcem stanovených postupů jednou za 12 měsíců – záznamy.
Inspection by competent person for periodic examination and strictly in accordance with the manufacturer's procedurers at least every 12 months – records.

Datum Date	Výsledek inspekce Inspection result	Podpis inspektora Inspector signature	Datum následující periodické prohlídky Next due date for periodic examination