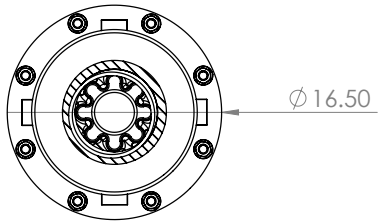

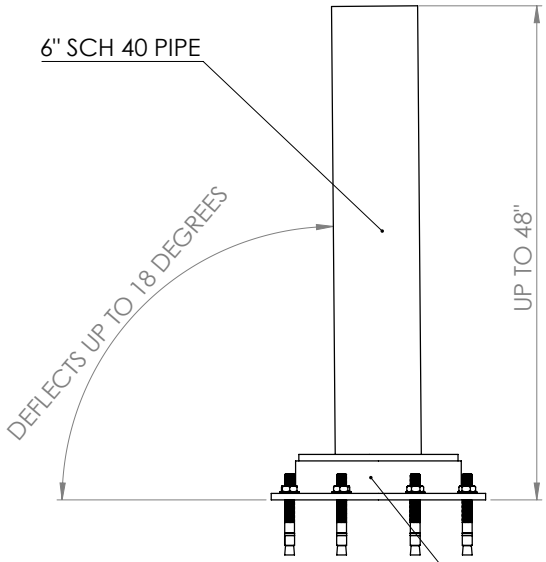

WRITE IN DESIRED HEIGHT
(INCHES):

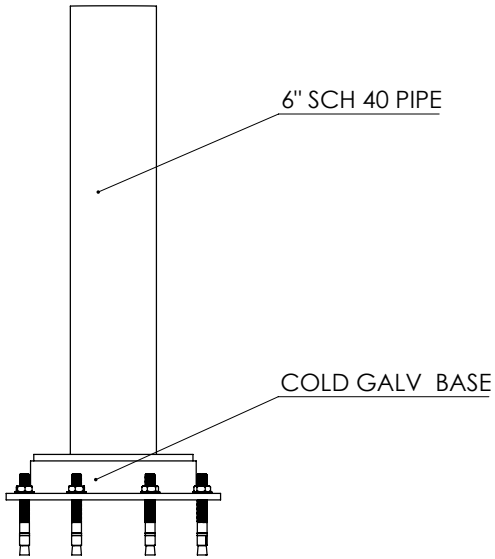

BASE INSTALL ORDER

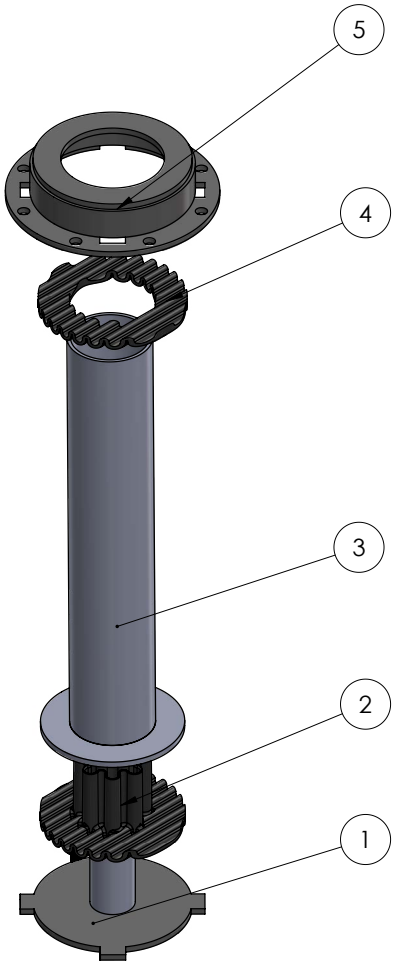

CUSTOMER SIGNATURE

UNLESS OTHERWISE SPECIFIED: DIMENSIONS ARE IN INCHES SURFACE FINISH: TOLERANCES: LINEAR: ANGULAR:	FINISH:	DEBURR AND BREAK SHARP EDGES	DO NOT SCALE DRAWING	REVISION	
	NAME	SIGNATURE	DATE	TITLE: BOUNCE BACK BOLLARD	
DRAWN					
CHK'D					
APPV'D					
MFG					
Q.A			MATERIAL:	DWG NO. BBB-ASSY-01	A3
			WEIGHT:	SCALE:1:10	SHEET 1 OF 1