DW-130
Free Standing Sink

- **Product Weight**
  121.2 lbs
- **Material**
  Solid Surface / Stone Resin
- **Color / Finish**
  Matte White (Glossy Optional)
- **Product Size (inches)**
  21-5/8 L x 17-5/16 W x 32-11/16 H

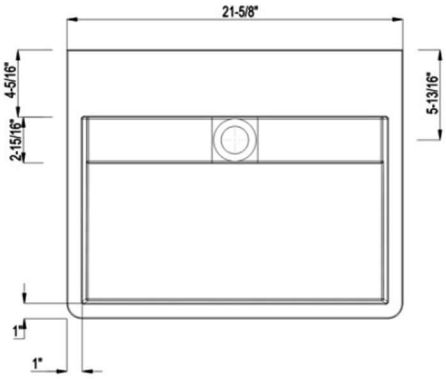

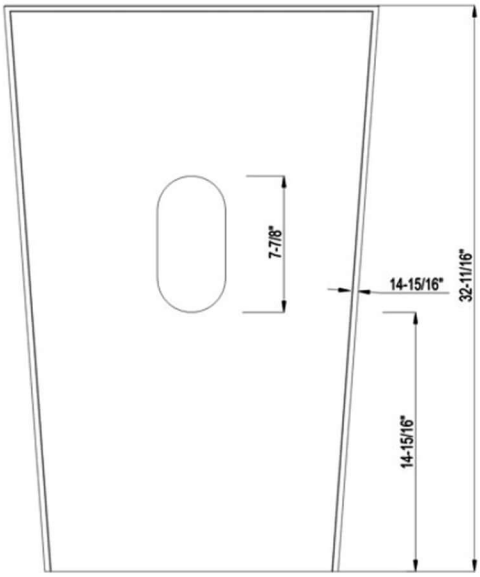

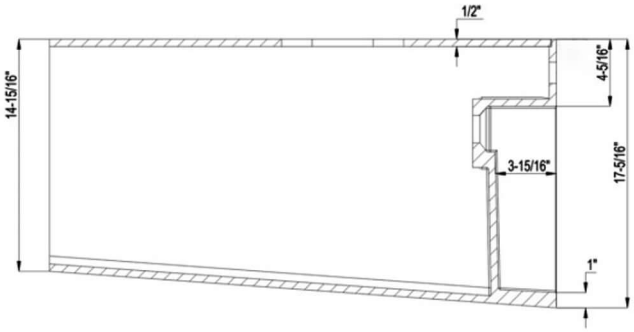

Blow away your troubles
with affordable Quality and Style

ADM Bathroom®
(888) 864-5853 / email: info@admbathroom.com
3340 Leonis Blvd. Suite A | Vernon, CA 90058