INSTALLATION SPECIFICATION

AM-010-48

Bathroom Mirror

Model No:	AM-010-48
Mount type:	Wall-mounted
Orientation:	Horizontal
Material:	Aluminum
Storage included:	No
Overall size:	48” W x 32” H x 1-3/4” D
Net weight:	30 lbs
Lens Thickness:	5mm

All measurements are approximate. Measurements may vary +/-1/2”.

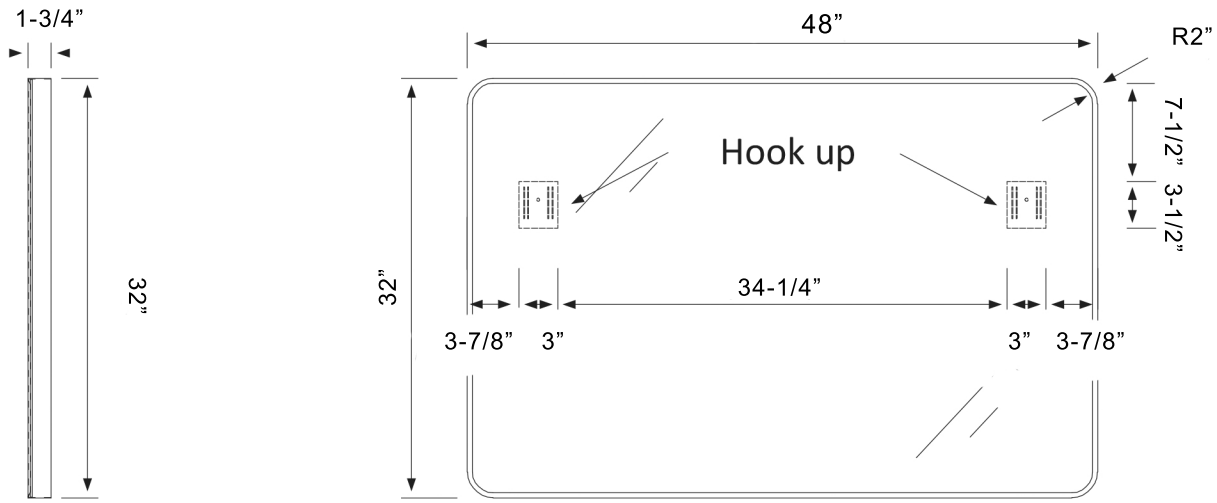

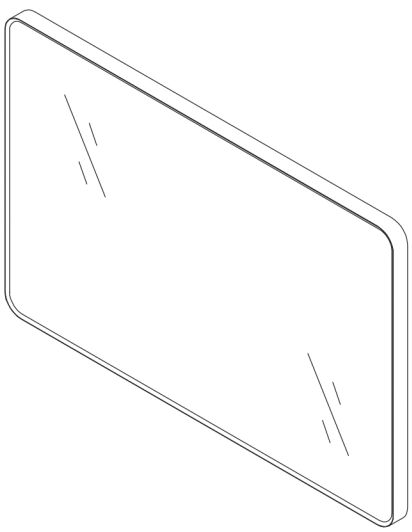

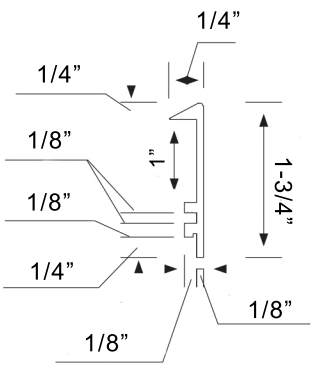

Aluminum section