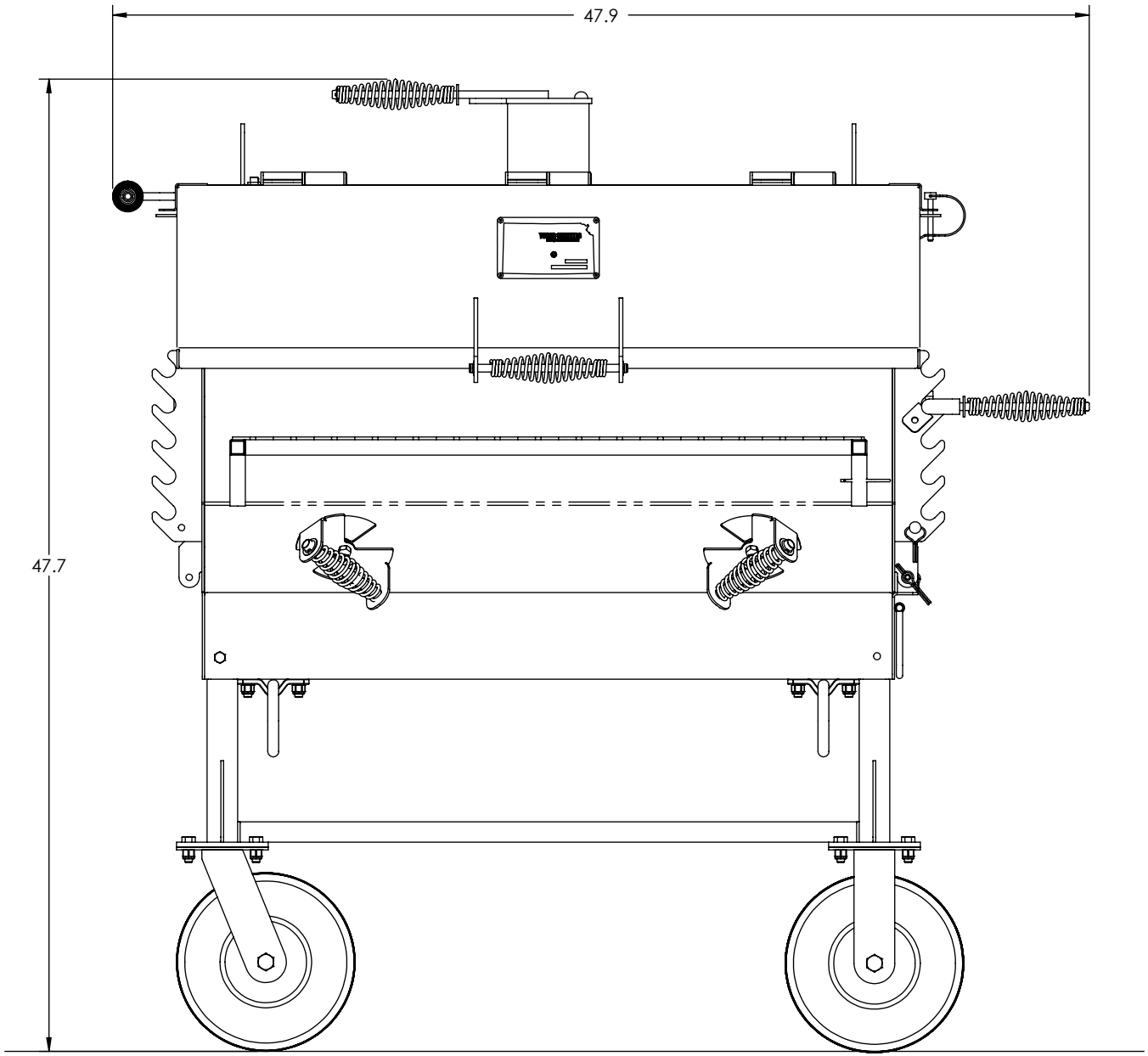
47.9
47.7

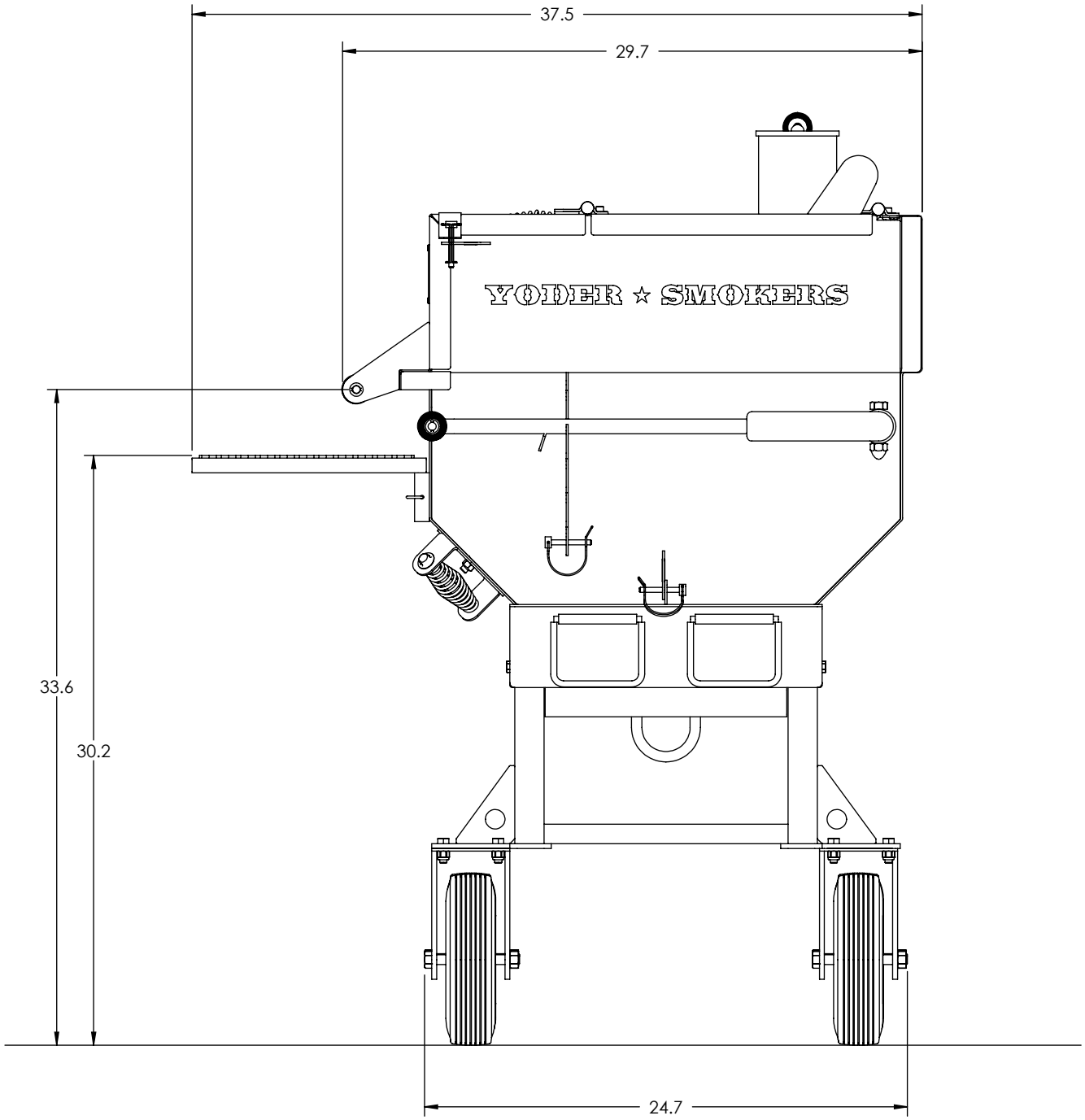
37.5
29.7
YODER ☆ SMOKERS
33.6
30.2
24.7