CUSTOM PLATENS.COM

EXPAND YOUR DTG PRINTING CAPABILITIES

Ri1000 Shoe Platen Installation Diagram

Placement template URL: www.customplatens.com/Downloads
Use the coupon code **ShP** to download the template.
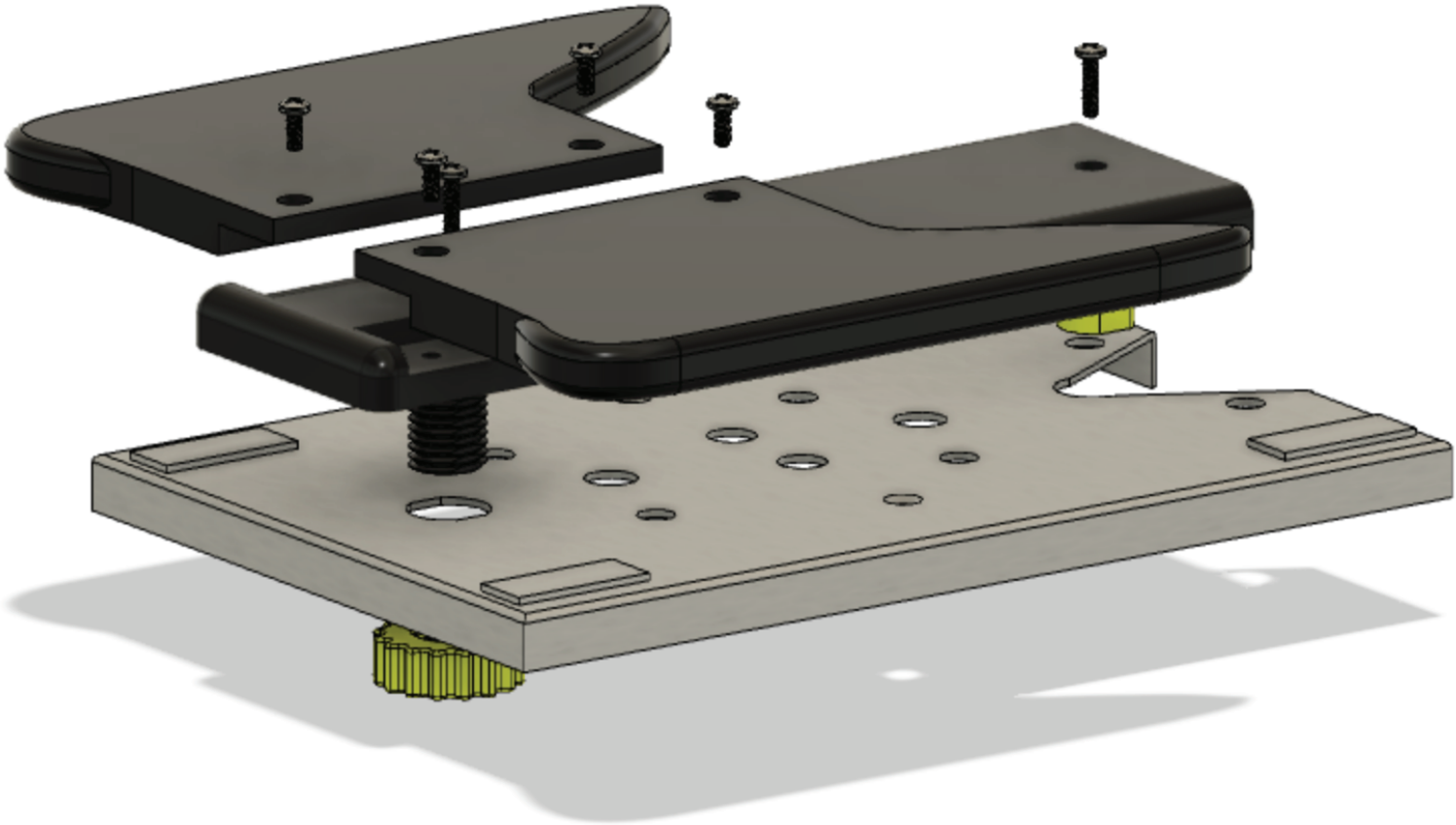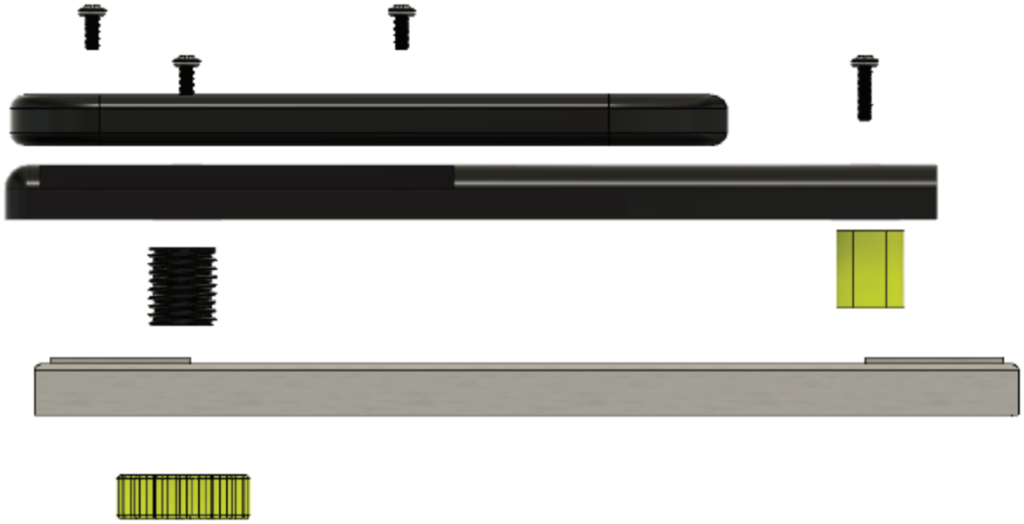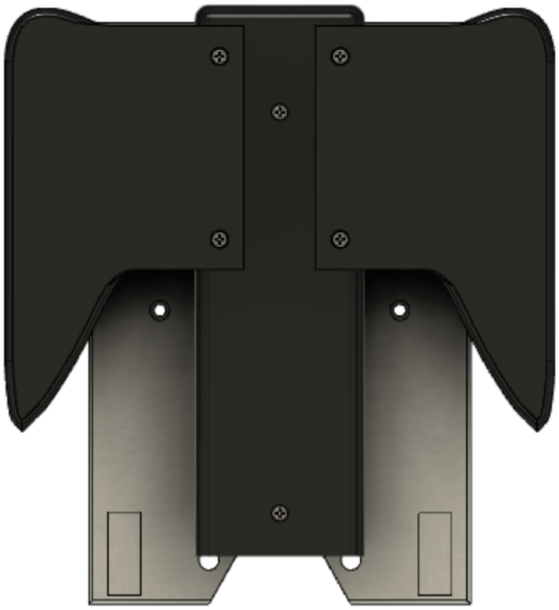
Contents: 2 M4x16mm Phillips screws, 4 M4x6mm Phillips screws,
2 platen attachments, 1 Alignment Pin, 1 Alignment Screw, 1 Nut, 1 Platen base