BALLOON	QTY	MANUFACTURER	ITEM NUMBER	DESCRIPTION
1	1	SLICE ENGINEERING	COP-P036	HEAT BREAK SHANK C-PRO MAX
2	1	SLICE ENGINEERING	COP-P041	HEAT BREAK BUSHING 1.75
3	1	SLICE ENGINEERING	COP-P051	HEAT BREAK TUBE 1.75

REVISION HISTORY		
REV	DCN	DATE
00		2019-06-05

1. Interpret dimensions and tolerances per ASME Y14.5-2009. Third-angle projection is used to project drawing views
2. For complete product definition, use this drawing in conjuction with associated model. CAD geometry is basic
3. Single-segment feature control frames (FCFs) and the upper segment of composite FCFs apply simultaneously
4. FCF segments denoted by a letter-in-triangle (example: Z) apply simultaneously with FCF segments denoted by the same letter-in-triangle
5. Default surface roughness: Ra shall not exceed 4% of the form requirement. ASME B46.1-2009 Table 3-2 specifies cutoff values
6. Dimensions are given in millimeters. Default tolerances: ⌖ ∅ 0.2 Ⓜ for screw threads. ⌓ 0.2 for surfaces
7. Tolerances apply after application of any specified plating or coating

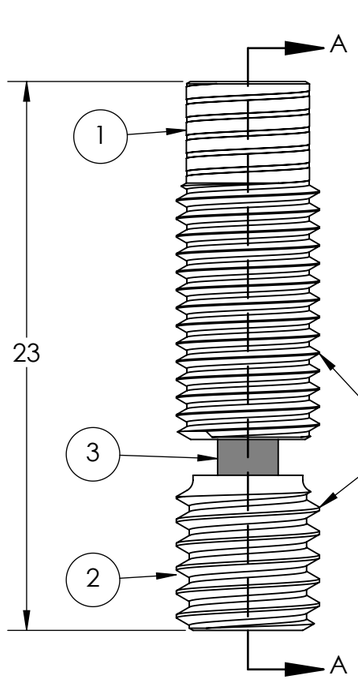

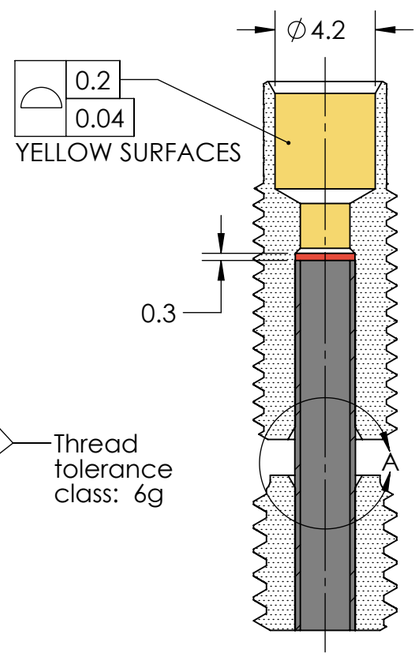

SECTION A-A

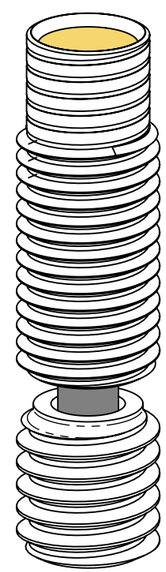

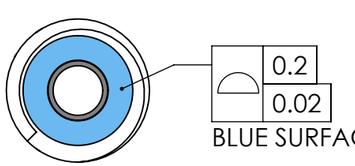

BLUE SURFACE

0.02 radial interference is shown between COP-P051 and COP-P036. Radial interference shall be chosen by the supplier to resist a 300N axial extraction force at 20°C

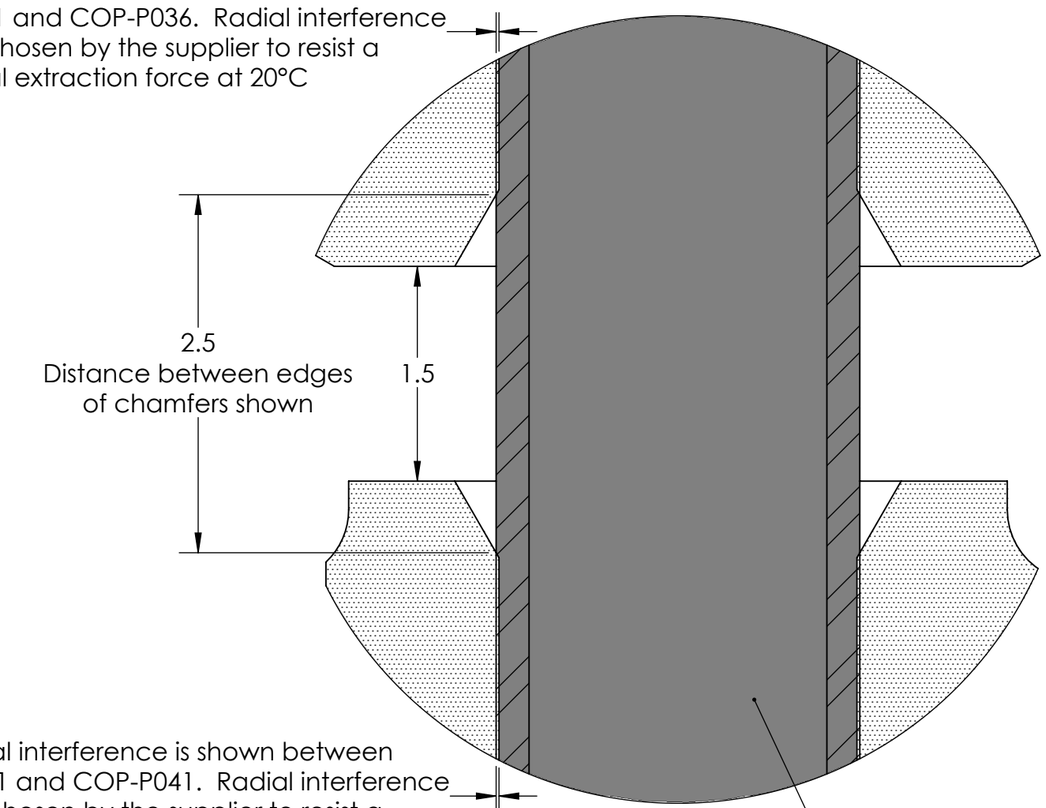

0.02 radial interference is shown between COP-P051 and COP-P041. Radial interference shall be chosen by the supplier to resist a 300N axial extraction force at 20°C

Plating shall cover entire inner surface of tube

DETAIL A
SCALE 24 : 1

creativecommons.org/licenses/by/4.0
BY SA

Slice Engineering®

SLICE ENGINEERING, LLC • GAINESVILLE, FLORIDA • SLICEENGINEERING.COM

MATERIAL	DESCRIPTION	
N/A	HEAT BREAK C-PRO MAX	
FINISH: TUNGSTEN DISULFIDE	ITEM NUMBER: COP-A016	REV: 00
COPYRIGHT © 2020 SLICE ENGINEERING LLC. THIS DRAWING IS PROTECTED BY UNITED STATES AND INTERNATIONAL COPYRIGHT LAWS	CREATED BY: C.M. MONTGOMERY	SHEET: 1/1

PRINTED ON: 2020-08-19