COUNTERTOP PLAN VIEW

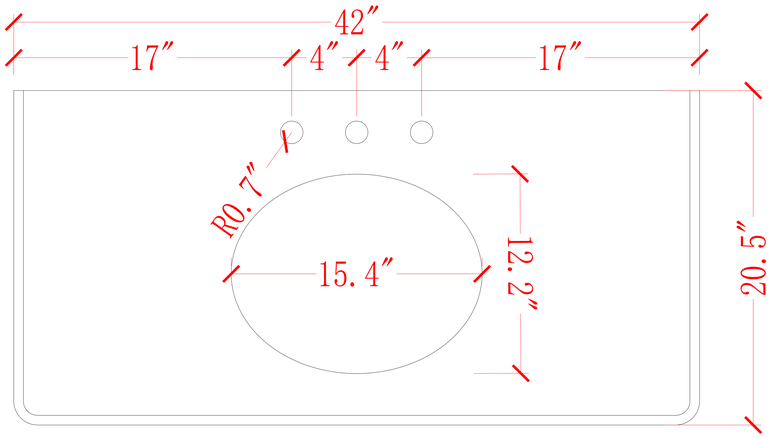

EDGE SIDE VIEW

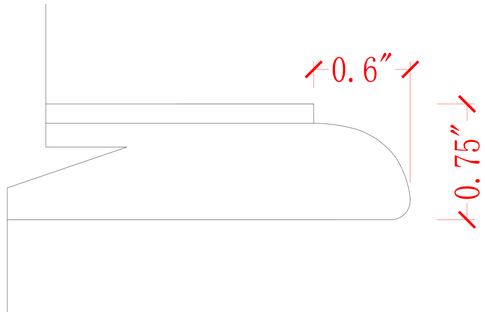
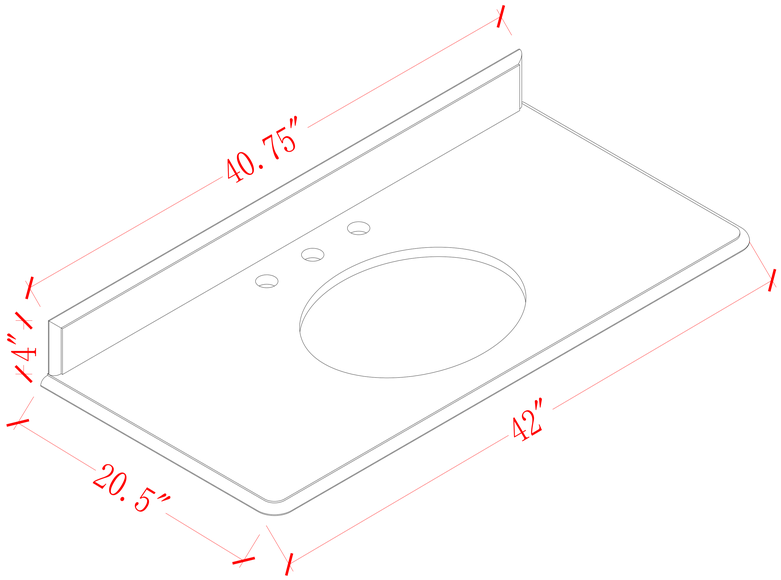
THREE DIMENSIONAL COUNTERTOP VIEW