MVP VISUALS
Custom Branded Displays
800-980-6871 | hello@mvpvisuals.com
www.mvpvisuals.com

DESIGN TEMPLATE

Front Panel Print Spandex

Size: 30” x 6’ x 29” tall

Open Back

Background Color:

PMS:

Example

Example
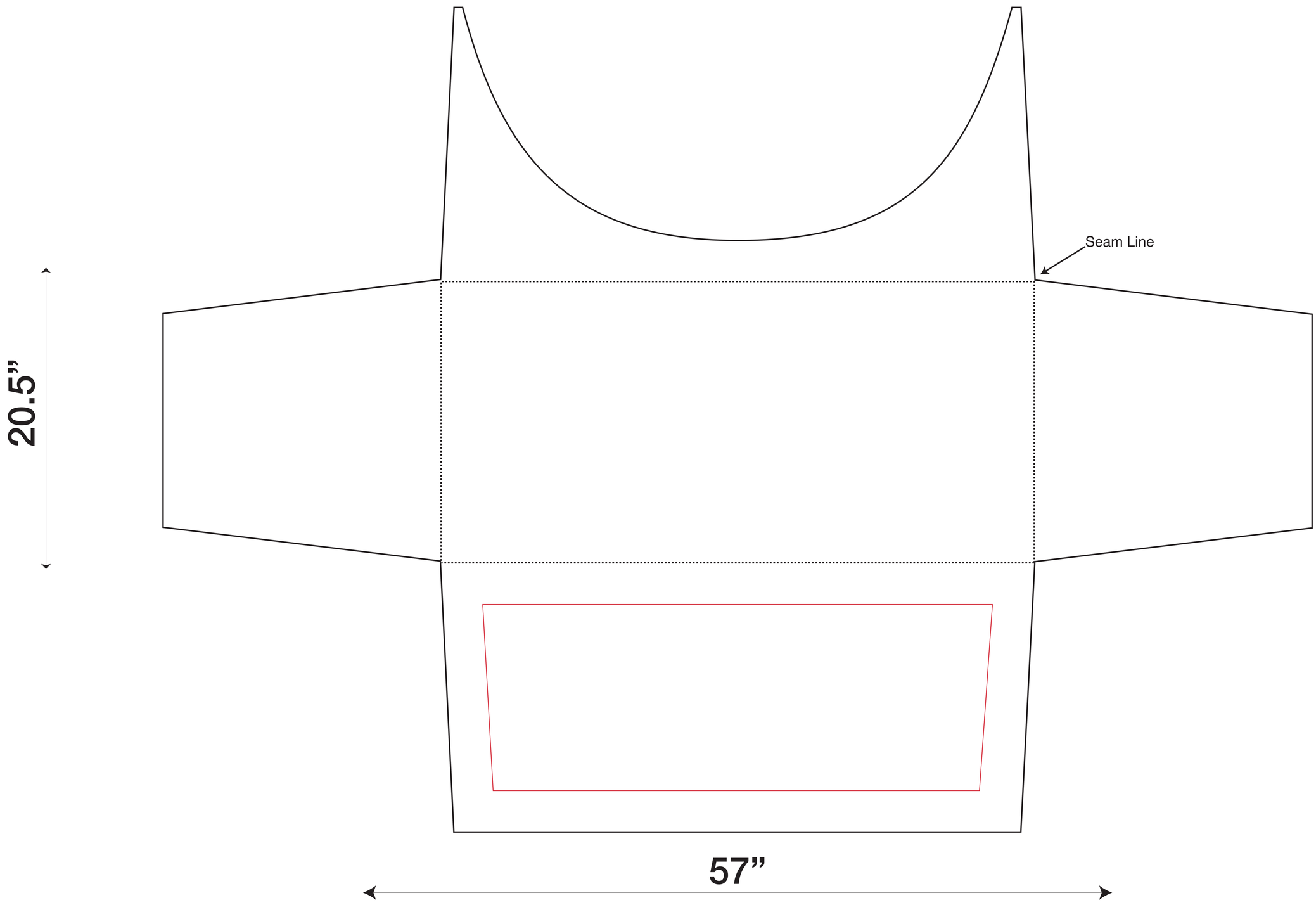
Example