AL8C

PASSTHROUGH WAREWASHER C/W HEAT RECOVERY UNIT OPERATOR MANUAL

WASHTECH®

PROFESSIONAL WASH SYSTEMS

Warnings

Before installation and commissioning, you must read the safety instructions and warnings carefully and all the warning labels attached to the equipment.

Equipment contains dangerous voltages and can be hazardous if installed or operated incorrectly. Non-compliance with warnings or failure to follow the instructions contained in this manual can result in loss of life, severe personal injury or serious damage to property.

Before installation or repair, you must read the instructions and warnings carefully and all the warning labels attached to the equipment.

All service/repair work must be carried out by qualified personnel only and ensure compliance with all local codes and standards including AS/NZS 3500.1.

Important Information

Failure to comply (even partially) with the instructions given in this manual will invalidate the product warranty and relieves the manufacturer of any responsibility.

The alteration of machine operation, design or the replacement of parts not approved by the manufacturer may void warranties and approvals.

This machine is intended for commercial use only.

This machine is designed for the cleaning of fresh food waste from crockery, cutlery, containers and food preparation and manufacturing equipment. Consult the manufacturer regarding suitability of the machine for other applications. It is not a waste disposal unit, and it is essential that significant loose soil or waste is removed from washware by pre-rinsing or scraping, before it is placed in the machine.

The information contained in this document is checked, reviewed and updated regularly to ensure that it is accurate and relevant to the model described. However discrepancies and errors can occur. We welcome your feedback.

Document subject to change without prior notice.

Contents

Contents

Safety Instructions

Installation
- Use qualified, skilled personnel.
- Follow installation instructions.
- Connect to correct voltage and supply current, and check that the phase rotation is correct.
- Provide fully accessible Electrical Isolation Switch & water supply valves.

Training and Supervision
- Read and Understand the Operating instructions and train all staff.
- This appliance must not be operated by children or infirm persons.
- Machine panels must only be removed by suitably qualified and trained personnel – internal hazards include live electrics and very hot surfaces.
- No part of this appliance is intended for use as a stepladder.

Hot Surfaces
- Some surfaces may be hot or very hot.

Chemicals
- Commercial dishwashing detergents are hazardous – handle with care.
- Read and follow the safety information found on the labels of detergent containers and Material Safety Data Sheets.
- Use protective eyewear and clothing if decanting containers.

Hot Water
- Do not put hands in wash water which may be over 60°C and contain hazardous caustic detergent.
- Rinse water can be over 90°C.
- Door safety switches are designed for emergency use only.

Cleaning
- Do not hose down the machine or splash water over the exterior.
- Watch for broken glass etc. when cleaning the inside of the machine.

Warnings

Equipment contains dangerous voltages and can be hazardous if installed or operated incorrectly. Non-compliance with Warnings or failure to follow the instructions contained in this manual can result in loss of life, severe personal injury or serious damage to property.

Installation and servicing must be carried out by a suitably qualified person in compliance with all local codes and standards including AS/NZS 3500.1.

Installation Diagram

AL8C Installation Diagram

- Part #: WAL80021
- Date: 24/02/2019
- Version: 3-D

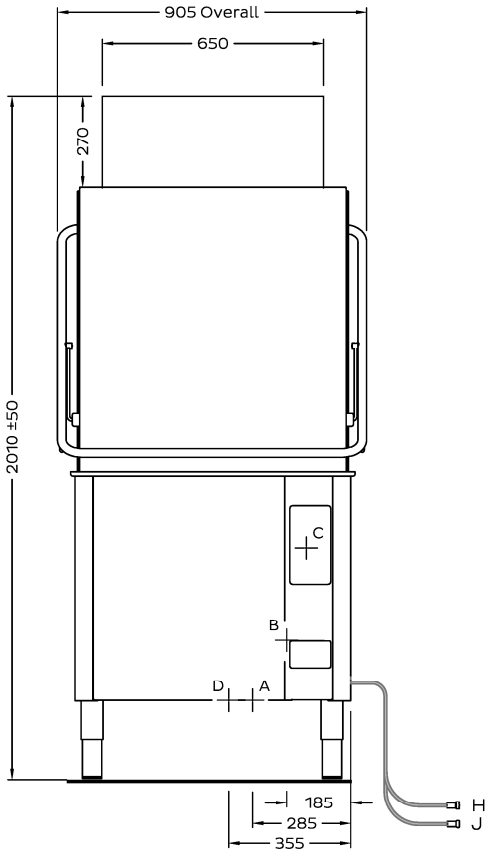

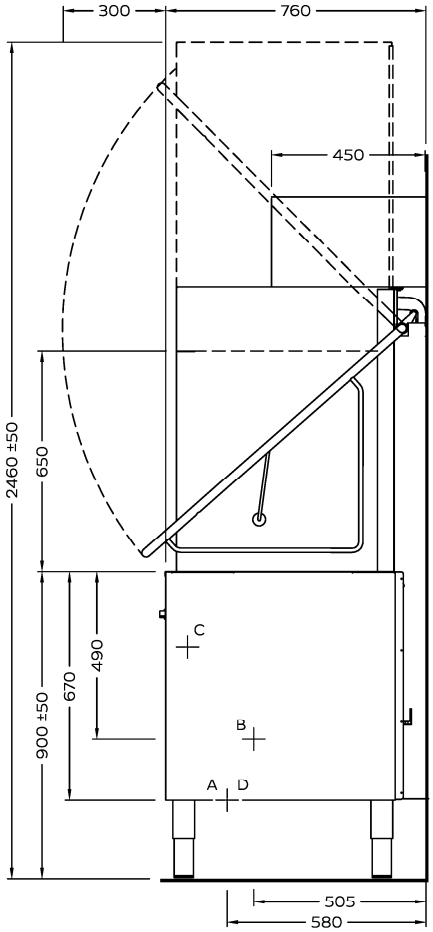

Bench detail

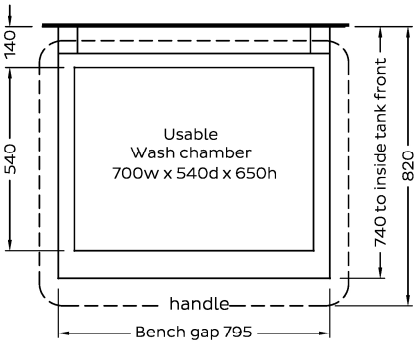

Internal Grid

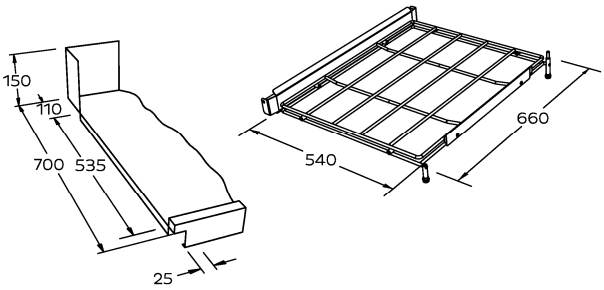

Services

A	Hot water 65°C	200-350 kPa	3/4"
B	Waste - tank drainage point	1.5" BSP	40mm
C	Electrical connection	400-415V, 50Hz, 3P+N+E	25A
D	Cold water 20°C	200-350 kPa	3/4"
H	Detergent		Inlet Tube
J	Rinse Fluid		Inlet Tube

Note: Isolating switch must be within 1m of, and not directly behind the machine. Isolating water valve must be readily accessible

Installation Instructions

Machine Positioning

- Unpack machine, check for damage and complete delivery.
- Install machine on sound waterproof self-draining floor and use adjustable feet to level machine.

NOTE: Failure to level the machine correctly may result in leaking during the cycle, overflowing from the door sill, poor hygiene through the wash tank not being able to drain correctly, and/or visibly uneven door.

- Allow room for detergent to one side of machine or in adjacent cupboard. 20 litre container requires approximately W 250mm x D 350mm x H 450 mm, but smaller containers are available from many suppliers.

Ventilation

- The CDe includes an integrated heat recovery unit in the top of the machine which captures and removes sufficient steam to enable it to be installed without a kitchen exhaust hood, subject to the area having minimum background ventilation of 1.1m2 free area opening and/or 350L/s mechanical ventilation or air change.

NOTE: The heat recovery system also requires the vents on the hood of the machine to be kept well clear of obstructions – do not to use the top of the machine for storage, and do not close the doors to the washroom if this is required as part of the minimum background ventilation. Staff must also be trained around the correct fitting of curtains.

Inlet Water Operation - Cold

Incoming water should be within the following standard requirements:

- Temperature: 20°C.
- Connection: 20 mm (3/4" BSP) male – flexible hose supplied.

NOTE: Flush supply line before connection. Poor quality supply or excessive water hardness may affect performance or damage machine – filtration and/or softening is recommended.

- Flow rate: minimum 10 litres per minute.
- Pressure: 100 to 350 kPa.

NOTE: This machine is equipped with a rinse booster pump as standard and does not rely on incoming water pressure to drive the rinse cycle.
NOTE: If above 350kPa fit pressure limiter valve (LPV). Do not use small diameter plastic supply lines.

- Consumption: Approximately 2.6 litres per cycle.
- Backflow prevention: Atmospheric Vacuum Breaker (AVB) fitted standard.
- Watermark Certification #08603.

Inlet Water Fill - Hot

Incoming water should be within the following standard requirements:

- Temperature: 65°C.

NOTE: Excessively high temperatures may damage the solenoid which can result in flooding should this component fail. High temperature solenoids are available and can be retrofitted if necessary.

- Connection: 20 mm (3/4" BSP) male – flexible hose supplied.

NOTE: Flush supply line before connection. Poor quality supply or excessive water hardness may affect performance or damage machine – filtration and/or softening is recommended.

- Flow rate: minimum 20 litres per minute.
- Pressure: no greater than 350 kPa.

NOTE: If above 350kPa fit pressure limiter valve (LPV). Do not use small diameter plastic supply lines.

- Backflow prevention: Atmospheric Vacuum Breaker (AVB) fitted standard.
- Watermark Certification #08603.

Installation Instructions

Water Quality Requirements

The incoming water should also be within the following parameters:

Hardness	ppm	pH
min	20	7
max	100	8

Ions	Cl-	SO_4	Fe	Mn	Cu	Cl_2
Max mg/L	100	400	0.1	0.5	0.05	0.1

NOTE: Levels above or below the stated requirements can be expected to increase component wear and reduce the expected useful life of the dishwasher. If in doubt, it is best to consult a water specialist and have the incoming water professionally tested and treated if necessary.

Power

- Electrical supply required is 3p+N+E, 415V 50Hz 45A per phase via switched outlet adjacent to machine.

NOTE: Equipment contains dangerous voltages and can be hazardous if installed or operated incorrectly. Non –compliance with warnings or failure to follow the instructions contained in this manual can result in loss of life, severe personal injury or serious damage to property.

Chemical

- This dishwasher is supplied with Detergent and Rinse Fluid injector pumps.
- To connect to chemicals, insert pump inlet hose into containers of commercial low foam detergent and rinse fluid.

NOTE: Externally adjustable chemical pumps are fitted and pre-set at an average level, these need to be calibrated on site according to the chemical being used and site specific conditions such as the water quality and how the machine is being used. Failure to do so may result in excessive dosing which can result in foaming and overflowing, or insufficient dosing which can cause inferior wash results and impact components through a build up of grease. If in doubt, contact your chemical company for assistance.
NOTE: Commercial detergents can be hazardous – read instructions, store safely and handle with care. Care needs to be taken when changing chemicals, ensuring that the detergent is not accidentally connected to the rinse fluid inlet line.
NOTE: If uncertain, please consult a chemical specialist for assistance in selecting the right chemicals and calibrating machine settings to suit this along with your unique site conditions and requirements.

Waste

- 40 mm gravity drain – refer point B on the installation diagram – run waste directly behind the machine or through open base.
- An S&P trap will need to be fitted at the drain waste – refer point B on the installation diagram.
- With a standard S&P trap the drain connection height will be no less than 570mm below the bench height on the model (or no higher than 330mm if installed in standard 900mm high benching).

NOTE: Either copper or PVC may be used for the waste connection – PVC is more resistant to some harsh detergents. Some authorities however suggest that copper is required because the machine rinses at up to 90°C. It is important to note that rinse water mixes with the 65°C wash water before discharge and then flows into the sink trap where the water is further cooled before entering the drainage plumbing. We recommend consulting your local authority to ensure your site remains compliant.

Installation Checklist

- Complete attached Installation Checklist to ensure machine is installed and running correctly, and operator is familiar with operating procedures.

Installation Checklist

Check		Notes
DELIVERY		
SUPPLIED COMPLETE?	☐	CHECK THERE HAS NOT BEEN ANY TRANSIT DAMAGE
POSITION		
LEVEL AND STABLE?	☐	ON SOUND, WATERPROOF, SELF-DRAINING FLOOR
WATER		
ISOLATOR VALVE FITTED?	☐	ACCESSIBLE, ALL FITTINGS SOUND, AND NO LEAKS
TEMPERATURE CORRECT (65°C)?	☐	HIGH TEMP SOLENOID IF ABOVE RANGE
PRESSURE CORRECT (< 350 kPa)?	☐	LIMITER FITTED IF ABOVE RANGE
FLOW RATE CORRECT (> 10L per min)?	☐	FLOW RATE ADEQUATE FOR MACHINE OPERATION
QUALITY WITHIN REQUIREMENTS?	☐	FILTER OR SOFTENER IN PLACE IF OUTSIDE REQUIREMENTS
POWER		
ISOLATING SWITCH?	☐	FITTED, FUNCTIONAL AND ACCESSIBLE
CORRECT SUPPLY (3p/25A 415V 50Hz)?	☐	VOLTAGE, CURRENT, CIRCUIT BREAKER ALL CORRECT
WASTE		
40MM CONNECTION (1.5" BSP)?	☐	HARD PLUMBED, NO LEAKS
SUITABLE AIR GAP?	☐	REFER OPERATOR MANUAL.

CHEMICALS	CHEMICAL NAME	CONTAINER	NO LEAKS	PRIMED	CALIBRATED
DETERGENT	_____	☐	☐	☐	☐
RINSE FLUID	_____	☐	☐	☐	☐

MACHINE OPERATION		
MACHINE RUNNING CORRECTLY?	☐	MULTIPLE CYCLES RUN, NO ISSUES
CHEMICAL DOSAGE CORRECT?	☐	CORRECTLY FLOWING INTO MACHINE, NO FOAMING
ALL OPERATIONS CORRECT?	☐	FILL LEVEL CORRECT, NO DRAINAGE ISSUES

OPERATOR TRAINING		
ENSURE THAT THE CUSTOMER HAS BEEN GIVEN THE OPERATION MANUAL AND WALL CHART, AND IS AWARE OF THE IMPORTANCE OF BOTH USING AND CLEANING THE MACHINE CORRECTLY.		
START UP	☐	
PRE-RINSE AND RACKING	☐	BETTER TO RINSE PLATES THAN REMOVE WASTE FROM MACHINE
MACHINE USE AND CYCLE SELECTION	☐	USE LONG CYCLE WHERE POSSIBLE
DRAINING THE MACHINE	☐	DRAIN THE MACHINE DAILY
SHUT-DOWN AND DAILY CLEANING	☐	CHECK WASH ELEMENTS HAVE COOLED BEFORE CLEANING
WEEKLY MAINTENANCE	☐	FULL MACHINE CLEAN INCLUDING WASH/RINSE ARMS
PLANNED SERVICNG	☐	EXPLAIN IMPORTANCE OF SERVICING MACHINE REGULARLY

Installation Troubleshooting

Door not closing properly
- Level the dishwasher.

Machine not starting or filling
- Ensure water supply to machine is turned on.
- Ensure power supply to machine is turned on.
- Check that the water inlet hose isn't twisted or kinked.

Cycle taking too long
- This machine ships with Thermostop enabled, which allows a cycle to be started at any time, even if the rinse water is not up to required temperature. To ensure a hygienic result, the wash cycle continues to run until the rinse temperature reaches the required 83˚C. At this stage washing will stop and the machine will begin rinsing to complete the cycle.

Poor wash results
- Check that there are adequate pre-rinse processes in place and staff use longer cycle options for more heavily soiled items.
- Ensure high quality non-foaming commercial dishwasher detergent has been connected at the correct dosage for your site, water quality and application. If uncertain, consult a chemical specialist.
- Check that the wash arm is spinning freely and is not being obstructed.
- Ensure that the wash temperature is between 60°C and 65°C.

Chemical residue on items after the cycle
- Check that nothing is obstructing the wash & rinse arms from rotating.
- Check the rinse fluid dosage is not too high. If uncertain, please consult a chemical specialist.
- Check detergent dosage is within the requirements.

Dishwasher is foaming
- Ensure there is no other soap being transferred into the machine from the sink.
- Ensure high quality non-foaming commercial dishwasher detergent has been connected at the correct dosage for your site and application. If uncertain, please consult a chemical specialist.
- Allow wash water to heat to at least 60˚C prior to starting the first cycle as some commercial dishwasher chemical will foam at low temperatures.

Other equipment in the kitchen has needed filters or has scale
- Due to the high temperatures in dishwashers, scale will build up in the wash tank, on the arms and in the rinse tank. The incoming water should be treated. If uncertain, please consult a water specialist.
- As with the combi-ovens, high chloride levels will do irreversible damage to a number of the components inside a commercial dishwasher. The incoming water should be appropriately treated. If uncertain, please consult a water specialist.

Cycle times not suitable for items being washed
- Some sites may require longer or shorter cycles depending on the items being washed and the soil levels. Cycle lengths can be adjusted by a qualified service agent accessing the WI-200 Electronic timer. For adjustment instructions refer to the adjustment section of the service manual for this model or the WI-200 Timer service manual.

Operator Use Guide

START

- Turn on at wall.
- Ensure the Upstand (2) and Wash Pump Filter (3) are firmly in place.
- Check the Scrap Trays (1) are in place and shut door.
- Turn the Selector Switch to any Cycle (I, II or III).
- Power Light glows red and machine fills automatically.
- Once full, rinse heating starts.

OPERATION

- Select required Cycle of I (2.5 minutes) , II (4.5 minutes) or III (6.5 minutes).
- Load items into the machine and shut door.
- Cycle Light glows green while machine operates.
- When Cycle Light goes out, the cycle is complete.

NOTE: The machine may be started while the rinse water is being heated – the machine will continue to run the wash cycle until the rinse water is up to temperature.

SHUT DOWN – EVERY NIGHT

- Turn Cycle Selector to 0 and turn off the power from the wall.
- Remove Scrap Trays (1) and Upstand (2) to drain the Wash Tank.
- Once the Wash Tank is fully drained remove and rinse Wash Pump Filter (3) and Scrap Trays (1) before replacing back into the machine along with the Upstand (2).

CLEANING – AT LEAST ONCE A WEEK

Remove, rinse and replace when machine has cooled down:

Scrap Trays	1
Drain Upstand	2
Wash Pump Filters	3
Rinse Arms	4
Wash Arms	5
Thumbscrews	6

Inspect and clear all jets in the upper and lower Wash/Rinse Arms using a small object such as a toothpick where necessary to remove any blockages prior to rinsing.

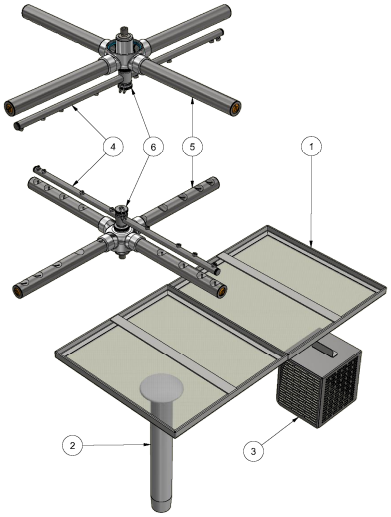

SUGGESTED BEST PRACTICE

Pre-rinse	Scrape and/or rinse trays, plates & glasses in cool water.
Chemical	Use a good quality non foaming commercial detergent and drying agent – do not use domestic detergents which will cause the wash tank to foam.

Operator Troubleshooting

Issue	Cause									
	POOR PRE-SCRAPING	CARRY OVER OF SOAP FROM SINK	OVERLOADING RACKS	MACHINE NEEDS CLEANING	DRAIN UPSTAND NOT PLUGGED IN	WASH/RINSE JETS BLOCKED	WASH/RINSE ARMS NOT ROTATING	DETERGENT DOSAGE LOW/HIGH*	RINSE FLUID DOSAGE LOW/HIGH*	POOR WATER QUALITY**
DISHES NOT CLEAN	●		●	●		●	●	●		■
STAINING	●					●	■	●		■
FOAMING		●		■				■	■	
PROTEIN BLOOM	■		■	●		■	■	■		
DIRTY MACHINE	●			●		■	■	■		■
FOOD RESIDUE ON WARE	■		●	■		■	■	●		
FILM/SPOTS ON WARE			■	■		■	●	●		■
DETERGENT RESIDUE						■	●	●		
GREASY FILM/NO FIZZ			■						●	■
HIGH DETERGENT USE				■	●			●		
HIGH RINSE FLUID USE				■					●	
WET WASHWARE			●	■					●	
SCALE BUILD UP IN MACHINE				●				■		●
FILTERS ON OTHER EQUIPMENT										●

● Likely cause ■ Possible cause

* For issues most likely due to incorrect chemical dosages or other chemical issues, we recommend you consult your chemical supplier and/or a local chemical expert prior to calling in a dishwasher technician.
** For issues that are likely due to poor water quality (scale building up, filters being required on other kitchen equipment etc.), we recommend you consult a local water specialist prior to calling in a dishwasher technician.

IF PROBLEMS PERSIST CONTACT MOFFAT SERVICE ON 1300 264 217

Schematic Diagram

AL8C (W) Schematic Diagram

- Part #: 01018119
- Date: 19/07/2018
- Version: 1-C

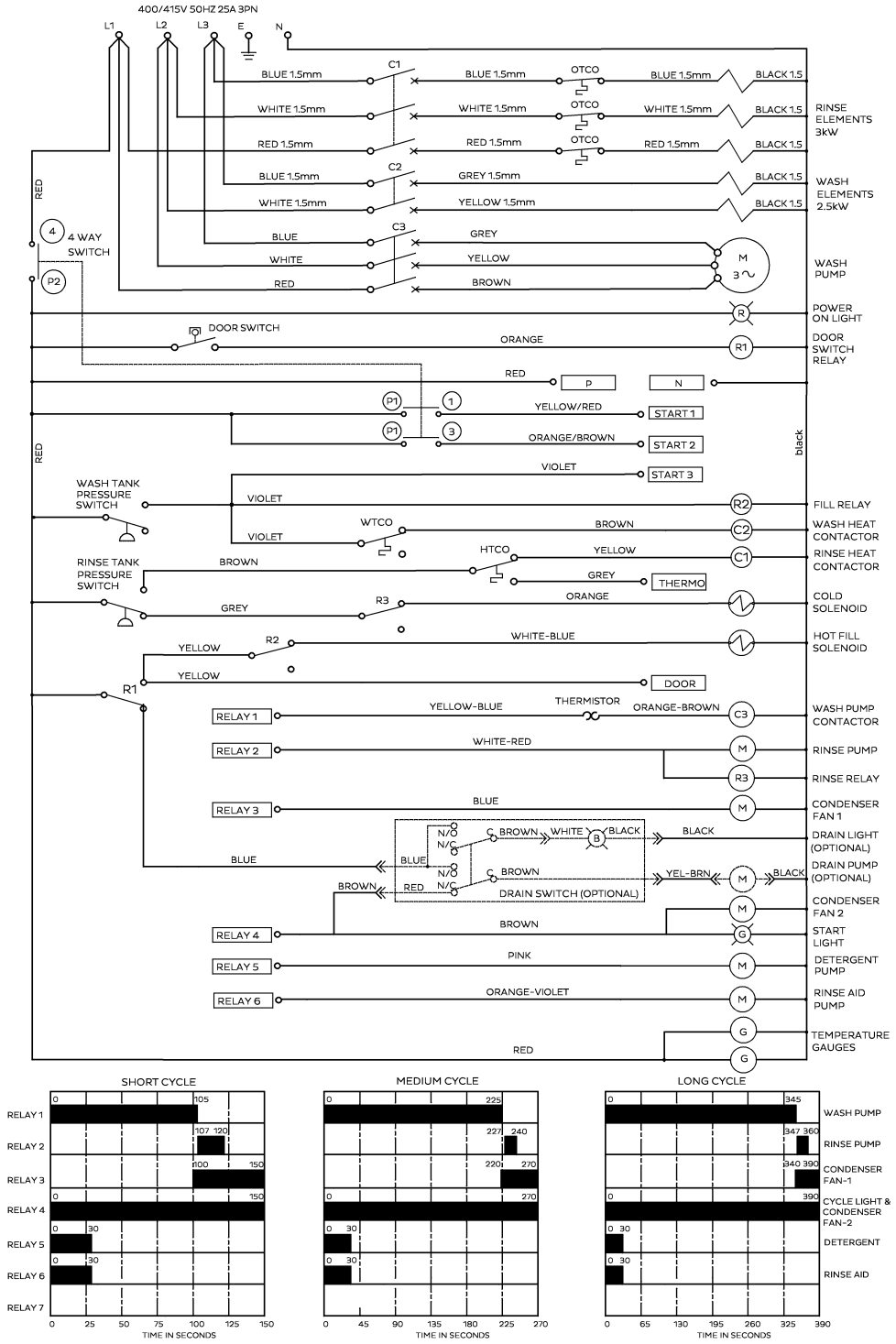

Accessories

AL8 Accessories

- Part #: AL8C ACW
- Date: 04/12/2017
- Version: 1-A

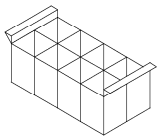

C660508
CUTLERY BASKET CP8 for 500mm

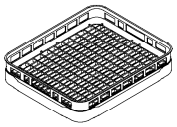

600 70043
CUPRACK 500mm X 600mm

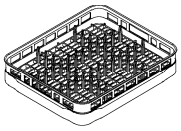

600 70042
DISHRACK 500 x 600mm

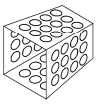

C660503
CUTLERY CONTAINER G

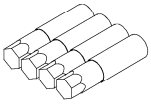

600 90154
SS LEG (63D x 225-325mm x M12)

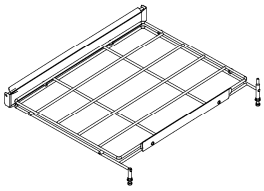

354 11029
RACK ASSEMBLY

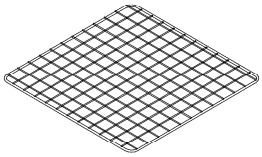

K0452
COVER

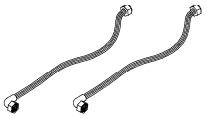

600 60080
2m HOSE ANGLE END

Spare Parts

DESCRIPTION	PART NO	REC. STOCK
Cabinet & Door		
• Control Panel Sub-Assembly	354 14008	1
• Control Panel Label	400 70189	1
• Spring Door 27 x 735 x 5	326 30019	1
Controls & Indicators		
• Contactor	600 30337	1
• Cycle Switch	600 30529	1
• Door Reed Switch	600 30183	1
• Knob 4 Position	600 30524	1
• Power Light	600 30529	1
• Pressure Switch Wash	600 30479	1
• Pressure Switch Break Tank	400 10214	1
• Relay 2 Pole 240V	600 30080	1
• Relay Base	600 30081	1
• Switch 4 Position	600 30269	1
• Temperature Gauge	600 30515	1
• Terminal Strip 12 Way	3229	1
• Timer Electronic	600 30513	1
Heating Components		
• Over Temperature Thermostat	600 30088	1
• Rinse Element 6 KW	600 30496	1
• Rinse Tank Assembly	400 10252	1
• Rinse Thermostat	30201	1
• Wash Element 2.5 KW	600 30159	1
• Wash Thermostat	30201	1
Hoses		
• Lower & Upper Wash Connection Hose	6195	1
• Pressure Switch Hose	3067	1mm
• Rinse Hose	600 60073	2000mm
• Rinse Tee SS	600 60230	1
• Wash Pump Inlet Hose	C200359	1
• Wash Pump Outlet Hose	61941	115mm

Spare Parts

DESCRIPTION	PART NO	REC. STOCK
Pumps and Solenoids		
• Condensor Fan	222	1
• Detergent Pump	600 30526	1
• Detergent Squeeze Tube	600 30134	1
• Rinse Aid Pump	600 30480	1
• Rinse Aid Squeeze Tube	400 30119	1
• Rinse Pump	600 30508	1
• Solenoid Valve 1 Way	3342	1
• Wash Pump	3906	1
Wash Tank Components		
• Drain Upstand 305mm	400 10145	1
• Locknut Wash Arm	280409C	1
• Pressure Bell	400 90135	1
• Rack Slide Assembly	354 11029	1
• Rinse Arm Assembly	400 10239	1
• Rinse Arm Bush	C190624	2
• Rinse Arm Cap Screw	261004C	2
• Rinse Arm End Plug	400 30200	1
• Rinse Arm Spring Retainer Screw	C450218	2
• Scrap Tray	354 12003	1
• Slip Ring Black Acetal	400 30191	2
• Temperature Gauge Probe Clamp	400 20066	1
• Wash Arm Assembly	400 10077	1
• Wash Arm Bush	190621C	2
• Wash Arm End Screw	600 80072	2
• Wash Pump Inlet Filter	352 10026	1

Distributed in Australia by Moffat Pty Limited

MOFFAT

740 Springvale Road
Mulgrave 3170
Victoria
Australia

24HR Service 1300 264 217
Parts 1300 263 107
Tel 03 9518 3888
Fax 03 9518 3818
E-mail sales@moffat.com.au
web www.moffat.com.au

ISO9001
All Washtech products are designed and manufactured by Washtech using the internationally recognised ISO9001 quality management system, covering design, manufacture and final inspection, ensuring consistent high quality at all times.

In line with policy to continually develop and improve its products, Washtech Ltd reserves the right to change specifications and design without prior notice.

an Ali Group Company

Ali GROUP

The Spirit of Excellence